LIBRARY OF CONGRESS
1800

A TREATISE

ON THE

WESTINGHOUSE

AIR BRAKE

PREPARED FOR STUDENTS OF

THE INTERNATIONAL CORRESPONDENCE SCHOOLS

SCRANTON, PA.

COPIOUSLY ILLUSTRATED WITH LINE DRAWINGS AND COLORED PLATES, AND CONTAINING A LARGE NUMBER OF PRACTICAL QUESTIONS

FIRST EDITION

SCRANTON

THE COLLIERY ENGINEER CO.

1900

2

20784

ONE COPY RECEIVED.

TF425
.I62

Library of Congress
TWO COPIES RECEIVED
JUL 16 1900
Copyright entry
May 21, 1900
No. A. 12770
2d [redacted] COPY.
2nd Copy Delivered to
ORDER DIVISION
JUL 18 1900

65358

Copyright, 1900, by THE COLLIERY ENGINEER COMPANY.

The Air Brake: Copyright, 1899, by THE COLLIERY ENGINEER COMPANY.

PRINTED BY
THE COLLIERY ENGINEER COMPANY,
SCRANTON, PENNA.

TYPOGRAPHICAL UNION LABEL SCRANTON, PENN.

aug. 9. 1900-100

PREFACE.

This volume contains the Instruction and Question Papers composing The Air Brake Course.

The Papers on the Westinghouse Air Brake are very thorough and complete. These Papers not only give an exhaustive description of each piece of the air-brake apparatus, but they also deal with all its defects, their causes and remedies; operating and testing; calculation of the braking force; air-signaling system; and devices for controlling heavy trains on down grades. In short, these Papers contain everything relating to the subject that it is necessary for the practical man to know. No work treating the subject in such a thorough, comprehensive, and practical manner has heretofore been published.

Special attention is called to the illustrations; whenever it has been thought that a cut would help make the subject clearer, it has been given, and considerable ingenuity has been displayed at times in arranging and presenting the various views and sections in such a manner as to enable those who are not accustomed to reading drawings to understand the sometimes complicated mechanisms and apparatus that are illustrated. To make still clearer the action of the Brake Apparatus in its various working positions, we have printed many of the larger cuts in colors—one color denoting main-reservoir pressure; another color, auxiliary-reservoir pressure; and so on, any one color always denoting the same kind of pressure. Similarly in the pump drawings, two colors are employed to represent live and exhaust steam, respectively, the former of these two being also used in the pump governor. Altogether eight colors are employed, and the reader is able to distinguish at a glance the nature of the pressure in each part of the apparatus at any

particular position of the working parts. Nothing like these color plates has ever before been published in a work on The Air Brake.

The method of numbering the pages, cuts, articles, etc. is such that each Paper and Part is complete in itself; hence, in order to make the indexes intelligible, it was necessary to give each Paper and Part a number. This number is placed at the top of each page, on the headline, opposite the page number; and, to distinguish it from the page number, it is preceded by the printer's section mark §. Consequently, a reference such as § 3, page 12, will be readily found by looking at the inside of the headlines until § 3 is found, and then through § 3 until page 12 is found.

THE INTERNATIONAL CORRESPONDENCE SCHOOLS.

CONTENTS.

	Section.	Page.
HISTORICAL.		
The Straight-Air Brake	1	1
The Automatic Brake	1	3
WESTINGHOUSE AUTOMATIC BRAKE.		
General Arrangement of Brake	1	4
Main Reservoir	1	8
Air Gauges	1	10
Pump Governors	1	13
The 8-Inch Air Pump	1	16
The 9½-Inch Air Pump	1	21
Plain Triple Valve	1	27
Quick-Action Triple Valve	1	34
Car Equipments	1	40
Train-Pipe Couplings	1	43
Retaining Valve	1	45
D-8 Brake Valve	1	47
F-6 Brake Valve	1	54
DEFECTS AND REMEDIES IN BRAKE SYSTEM.		
Pump Governors	2	1
Pumps	2	4
Quick-Action Triple Valve	2	20
Plain Triple Valve	2	29
Care of Triples	2	30
Freight Equipment	2	31
Retaining Valve	2	34
D-8 Brake Valve	2	37
F-6 Brake Valve	2	42
Care of Engineer's Valves	2	46
Equalizing Reservoir	2	48

Operating and Testing.	*Section.*	*Page.*
Make-Up of Train	3	1
Making Up Freight Trains	3	4
Testing Brakes	3	5
Handling Trains	3	17
Running	3	26
Piston Travel and Its Adjustment	3	35
Brake Gear.		
Levers and Leverage	3	44
Brake Power	3	58
Train Air-Signaling System.		
General Arrangement of Apparatus	4	1
Description of Apparatus	4	4
Signaling	4	11
Defects in the Signaling System	4	11
Terminal Test of Apparatus	4	15
High-Speed Brake.		
High-Speed Service	4	17
General Arrangement of Apparatus	4	18
Operation of Apparatus	4	21
Operating the Brake	4	28
Control of Heavy Freight Trains on Grades.		
Westinghouse Special Apparatus	4	32
Water Brake	4	36
Sweeney Air Compressor	4	41
Questions.		*Sections.*
The Air Brake, Parts 1 to 4		1 to 4

Red		*Main-Reservoir Pressure.*
Pink.	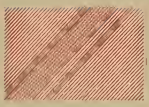	*Brake-Cylinder Pressure.*
Green.		*Auxiliary-Reservoir Pressure.*
Light Green.		*Brake-Valve-Reservoir Pressure.* (*Equalizing Reservoir.*)
Orange.		*Atmospheric Pressure.*
Yellow.		*Train-Pipe Pressure.*
Blue.		*Live Steam.*
Light Blue.	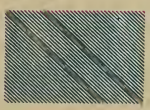	*Exhaust Steam.*

KEY TO THE COLOR PLATES.

THE AIR BRAKE.

(PART 1.)

HISTORICAL.

1. The forms of brake in general use before the adoption of the air brake were the hand and the spring brake; most trains, however, were controlled by hand power.

Both of these brakes were ineffective, even for the slower speed of trains in those days, and a field of invention was open for the production of a brake that would permit of a higher safe speed for trains. Mr. George Westinghouse, Jr., brought out the first form of air brake, called the "Straight-Air" Brake, in 1869.

THE STRAIGHT-AIR BRAKE.

2. **General Equipment.**—The engine equipment that was employed in connection with this kind of brake consisted of a pump, a main reservoir, an engineer's valve, a gauge, and a train line. A pipe connection between the pump and main reservoir allowed the pump to compress air directly into this reservoir, and the air thus compressed was stored in the reservoir for braking purposes. A pipe led from the main reservoir to the engineer's valve, which at that time was a **three-way cock.** This valve had three positions, namely, *lap*, *service*, and *release.* The improved three-way cocks had a *running position* and an *excess-pressure valve.*

With the valve *on lap*, all ports were closed, and there could be no passage of air through the valve; in *service position*, a port

was opened between the main reservoir and the train line; and in *release position*, a port connection was established between the train line and the atmosphere.

On each car, and on the tender, were placed a brake cylinder and a train pipe, a hose being provided at each end of the train pipe to enable the train line to be coupled up throughout the train. The train pipe on the car was directly connected with the brake cylinder, so that, if any pressure was in the train pipe, the same pressure was in the brake cylinder.

3. Operation.—While the brakes were off, and before they could be operated, the pump compressed the desired pressure into the main reservoir. If the engineer wished to apply the brakes, he placed the three-way cock in *service position*. This position of the valve allowed main-reservoir air to pass through the three-way cock into the train line, and thence into the brake cylinders, since the brake cylinders were directly connected with the train line. When the desired pressure had been admitted to the train line and brake cylinders, the three-way cock was placed *on lap*, in which position all ports were blanked. The pump would continue compressing air into the main reservoir, to be put into the train pipe when the valve was again placed in service position.

To release the brakes, the engineer placed the valve in *release position*, which allowed air coming from the train line and brake cylinders to pass to the atmosphere through the three-way cock.

4. Defects.—With this form of brake, the brakes on the entire train were rendered useless if a hose burst or if the train broke in two, as then the air admitted into the train pipe to set the brakes would pass to the atmosphere through the burst hose instead of into the brake cylinder. Aside from this, there were several other serious defects in this brake. On a long train, the main reservoir, when connected with the train pipe and brake cylinders through the three-way cock, would equalize at a low and comparatively ineffective braking pressure, as a consequence of which, considerable time was required to stop a train. Again, air entering at the head of the train had a tendency to apply

the brakes at the head end first, and, when a sudden application of the brakes was made, the slack, running ahead from the rear, would often do serious damage to the cars and their contents. The effect of friction on the flow of air through the train line also hindered the free passage of air through the train pipe, causing the brake to be slow in its action, both in application and release.

THE AUTOMATIC BRAKE.

5. Automatic Air Brake.—The many defects of the straight-air brake led to further study, invention, and experiment, the result being the introduction of the *automatic air brake* by Westinghouse in 1873.

The adoption of the automatic brake necessitated the addition of an auxiliary reservoir and plain triple valve under each car and tender, but did not, for the time being, affect the engine equipment—the brake valve, reservoir, etc.

With the automatic brake, the necessary braking power, regardless of the length of the train, was stored in the auxiliary reservoir under each car, for use on that particular car; and, if a hose burst or the train parted, the triple valves would automatically apply the brakes on the whole train—something that could not result on a train equipped with the straight-air brake. Thus, a safer and quicker brake was obtained. Even this one, however, was found to be too slow in its action in cases of emergency, the brakes not setting with sufficient rapidity to avoid damage when the slack in the train ran ahead. When a quick reduction of train-pipe pressure was made, the head brakes would be set in full before the reduction reached the rear of the train, this retardation being due to the friction of the air in the long train pipe.

The trouble thus experienced with the plain triple led to the invention of the *quick-action triple valve* that was brought out by Westinghouse in 1887. This valve could be substituted for the old-style valve on trains already equipped, no other changes in the system being necessary, except the use of a larger train pipe.

6. High-Speed Brake.—The straight-air brake is now practically a thing of the past; the plain automatic is used only on engines, tenders, and a few old-style freight equipments put on years ago; while the **quick-action automatic** is in general use on both freight and passenger cars throughout the country.

The demand for trains having a schedule speed of more than 50 miles an hour has made necessary a brake even more powerful than the quick-action automatic. Such a one is the **high-speed brake,** as now used on fast-timed trains like the "Empire State," the "Black Diamond," the "Congressional Limited," etc.

WESTINGHOUSE AUTOMATIC AIR BRAKE.

GENERAL ARRANGEMENT OF BRAKE.

7. Air Pump.—The essential parts of the **Westinghouse automatic air brake,** and their arrangement on the engine, tender, and passenger car, are shown in Fig. 1. The *air pump*, generally placed above the right running board in front of the cab, consists of a steam cylinder *1* and an air cylinder *2*. The two pistons working in these cylinders (one in each) are attached to the same piston rod, as seen in the figure. Therefore, the air piston moves up and down exactly as the steam piston does, and thus compresses the air to be used in the brake system. When the compressed air leaves the pump, it goes to the main reservoir and to the engineer's brake valve; thence, in certain positions of this valve, it passes through the same into the train pipe, and thence through the triple valves into the auxiliary reservoirs. A pressure of 90 pounds is stored in the main reservoir on the engine for the purpose of releasing brakes and recharging the auxiliaries and train pipe.

8. Pump Governor.—The *pump governor 3* is placed in the steam pipe leading to the pump, being located between

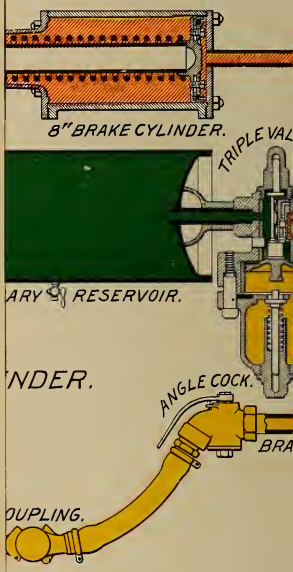
8" BRAKE CYLINDER.
TRIPLE VAL
ARY RESERVOIR.
NDER.
ANGLE COCK.
BRA
OUPLING.

ENGINEE

FEED VA

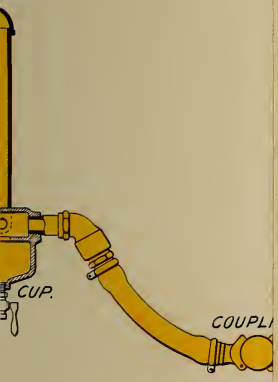

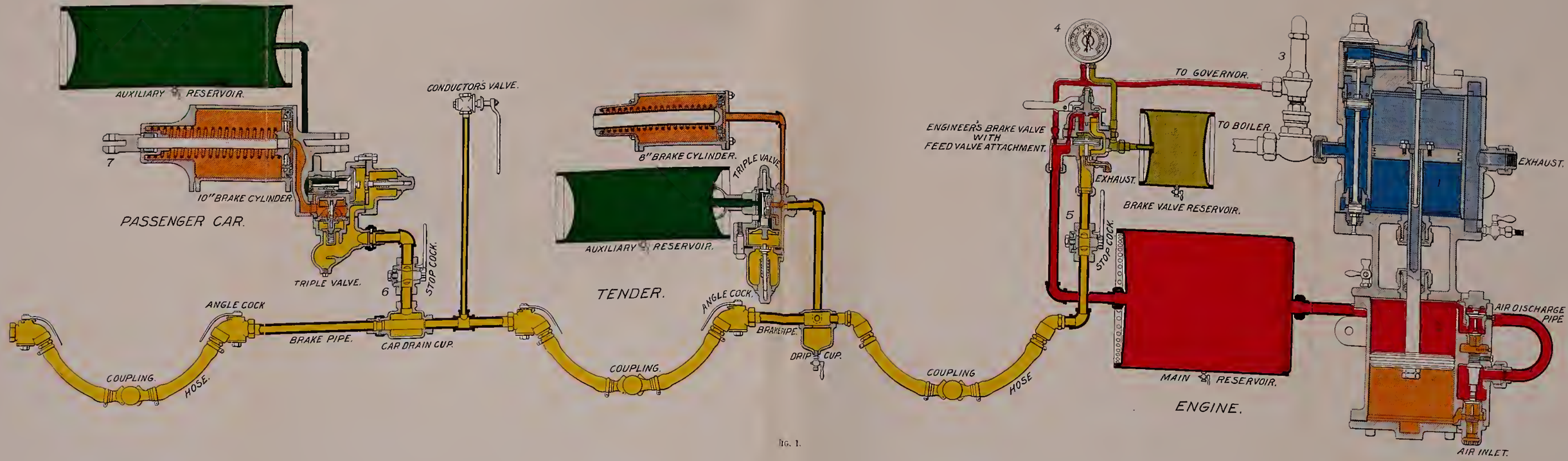
AUXILIARY RESERVOIR.
7
10" BRAKE CYLINDER.
PASSENGER CAR.
TRIPLE VALVE.
6
STOP COCK.
CONDUCTOR'S VALVE.
ANGLE COCK
BRAKE PIPE.
CAR DRAIN CUP.
COUPLING.
HOSE.
8" BRAKE CYLINDER.
TRIPLE VALVE.
AUXILIARY RESERVOIR.
TENDER.
ANGLE COCK.
BRAKE PIPE.
DRIP CUP.
COUPLING.
COUPLING
HOSE
4
ENGINEER'S BRAKE VALVE WITH FEED VALVE ATTACHMENT.
TO GOVERNOR.
3
TO BOILER.
EXHAUST.
BRAKE VALVE RESERVOIR.
5
STOP COCK.
MAIN RESERVOIR.
ENGINE.
EXHAUST.
AIR DISCHARGE PIPE.
AIR INLET.

FIG. 1.

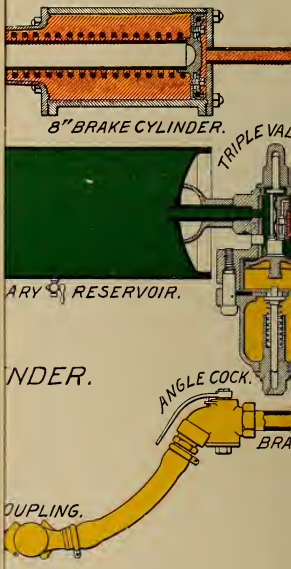
8" BRAKE CYLINDER.
TRIPLE VAL
ARY RESERVOIR.
NDER.
ANGLE COCK.
BRA
OUPLING.

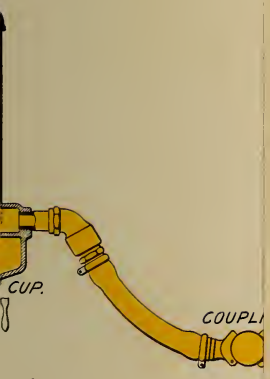
ENGINEE
FEED VA
CUP.
COUPLI

it and the lubricator. It acts as an automatic throttle valve that stops the pump when the desired air pressure is obtained in the main reservoir or train pipe (to whichever it may be connected), and starts it again when, for any reason, this pressure falls below the desired amount.

9. Main Reservoir.—This reservoir, which is usually placed under the engine, just back of the cylinders, is a store chamber in which a large supply of compressed air is maintained. This supply of air is used to charge the train pipe and auxiliaries, and to release brakes, if set, by charging the train pipe to a higher pressure than that in the auxiliaries; also, to feed any train-pipe leaks while the brakes are released. The usual main-reservoir pressure is 90 pounds, but this is exceeded (1) in mountain districts, (2) when handling very long trains, (3) when the train is equipped with the high-speed brake, or (4) when the Westinghouse special attachment for controlling heavy trains on long down-grades is used.

10. Engineer's Brake Valve.—This valve is located in the cab of the engine, in a position convenient to the engineer. Its function is to regulate the flow of air from the main reservoir to the train pipe, and through chamber *D* in the brake valve to the small *equalizing reservoir* under the right running board, sometimes called the *brake-valve reservoir*, or "little drum"; from the train pipe through the engineer's valve to the atmosphere; and from chamber *D*, the equalizing reservoir, and train pipe to the atmosphere; also, if desired, it prevents any flow of air whatsoever. The equalizing reservoir is connected to chamber *D* of the brake valve, with the object of increasing the volume of that chamber. Air passes through chamber *D* when going either into or out of the brake-valve reservoir.

11. Air Gauge.—The *air gauge 4* is placed in the cab in such a position that it may be easily seen and read by the engineer. It is of the *duplex* pattern, and really consists of two gauges. It has two hands or pointers—one colored red and the other black. The red hand indicates the main-reservoir pressure; the black one shows the pressure in the chamber *D*

(of brake valve) and the equalizing reservoir, this pressure being generally the same as that in the train pipe. Although the gauge pipe leading to the black gauge hand is connected with the equalizing reservoir, the black hand, for reasons that will be explained in the study of the engineer's valve, is generally spoken of as indicating train-line pressure.

12. Cut-Out Cock.—A *cut-out cock 5* is placed in the train pipe just below the brake valve. This allows the brake valve to be "cut out" from the train line for the purpose of testing, or when this particular engine is the "following" one of a "double-header," and the brakes are to be controlled by the leading engineer.

13. Train Pipe and Attachments.—Mention has already been made of the **train pipe.** It is the pipe that leads from the brake valve back through the train, and is connected to the triple valves by means of **branch pipes.** It is through the train pipe that air, after leaving the brake valve, is conducted to the triple valves, through which valves it passes into the auxiliary reservoirs. The pressure usually carried in the train pipe is 70 pounds, except in mountainous districts and on trains equipped with the high-speed brake already referred to. The sections of train pipe under adjacent cars are connected by means of flexible rubber *hose* and suitable *couplings.*

Angle cocks, for the purpose of closing the train pipe, are placed at each end of a car, in case it should be necessary to switch the car, or if for any reason it should be necessary to disconnect the hose, as well as to close the rear end of the train pipe. Angle cocks, in all modern equipments, are open when the handle stands parallel with the train pipe, as shown in Fig. 1, and closed when at right angles to it.

The handle of the cut-out cock *6*, Fig. 1, stands at right angles to the branch pipe when the cock is open, and parallel with it when closed. In very old equipments, however, the older form of cut-out cock is used, their handles standing crosswise of the pipe when open. If there is any doubt as to whether a cock is open or closed, glance at the crease in the top of the plug valve. This crease should be parallel with the pipe when the

cock is open. If the brake on any car is defective, it may be cut out by closing the cut-out cock *6*, without affecting the operation of the brakes ahead of, or behind, that car.

14. Auxiliary Reservoir.—An *auxiliary reservoir* should be placed on each engine, tender, and car; the old custom of using one auxiliary for both engine and tender is now considered very poor practice, and is seldom met with. The function of the auxiliary reservoir is to receive and store air for use in applying the brake on the car on which it is placed. Auxiliary pressure, when fully charged, is equal to train-line pressure.

15. Brake Cylinder.—A *brake cylinder*, in which a piston operates, is placed under each car of the train. The brake levers are connected to the crosshead *7*, Fig. 1, in such a way that, when air pressure is admitted to the brake cylinder and forces the piston out, the brake shoes are forced up to the wheels.

16. Triple Valve.—This valve is connected at the junction of the train pipe, auxiliary reservoir, and brake cylinder. It has three duties to perform: (1) to charge the auxiliary by connecting it with the train line; (2) to apply the brake by connecting the auxiliary with the brake cylinder; and (3) to release the brake by connecting the brake cylinder with the atmosphere.

17. Conductor's Valve.—This valve is placed only on cars in passenger, mail, baggage, express service, and on cabooses. It is generally located at the end of the car, and is connected with the train line by a branch pipe. This valve is intended for the trainmen's use, so that they may have the power to stop the train in case of an emergency of which the engineer is ignorant. A cord running the full length of the car is connected to this valve; when this cord is pulled, it opens the valve and allows air to escape from the train pipe, which causes the brakes to apply.

18. Drain Cups.—These cups are placed on all engines, tenders, and cars. Each *drain cup* contains a screen to keep dirt and other foreign matter from reaching the triple. The

drain cup on the tender is made larger, as it collects considerable moisture, which should be drawn off through the *drain cock* after each trip.

MAIN RESERVOIR.

19. The **main reservoir** (Fig. 1) is an air-tight cylinder having a pipe connection with the pump and also one with the engineer's brake valve.

SIZE.

20. Main reservoirs vary in size according to the kind of service—freight or passenger—in which the engine is employed. The following table gives the standard sizes:

STANDARD SIZES OF MAIN RESERVOIR.

Outside Dimensions.		Capacity. Cubic Inches.
Length. Inches.	Diameter. Inches.	
22½	34	11,200
24½	34	14,000
26½	34	15,800
20½	41	12,200
22½	41	14,000
24½	41	17,400
26½	41	20,000

In the best practice, a main reservoir of not less than 16,000 cubic inches capacity for passenger, and 20,000 for freight, service is used.

A larger main reservoir is necessary on freight than on passenger engines, (1) because of the greater number of air cars handled in a train in freight service; (2) because there is a longer train pipe and more auxiliaries to recharge after the brakes are released; and (3) because the greater the volume of air in the main reservoir, the higher the pressure at which the

main reservoir and train pipe will equalize, and the easier, therefore, it will be to release brakes.

It is often found that when a pump is heating, the trouble will disappear entirely if the capacity of the main reservoir is increased. If the train is long and the main reservoir small, a high pressure must be carried in the latter in order that it may equalize with the train pipe at a sufficiently high pressure to promptly release the brakes and recharge the auxiliaries. When the main reservoir is large, a much lower reservoir pressure can be carried, and the pump can also store a greater quantity of air while the brakes are applied. When, therefore, the main reservoir is small, the pump must work both faster (or longer) and against a higher pressure, and either of these tends to cause overheating.

LOCATION.

21. The main reservoir is usually located between the frames, back of the cylinder saddle. This is the most approved location, although it is sometimes found advisable to sacrifice the location in order to use a main reservoir of the desired capacity. It should, if possible, be located *lower than the air pump* in the brake system on the engine, in order that all dirt, oil, and moisture will settle there. Then it may, and should be, drained after each trip, a drain cock being provided in the bottom of the reservoir for this purpose. When water is allowed to accumulate in the main reservoir, it not only reduces the space available for storing air, but if the pipes of the brake system are not properly arranged on engine, it will work back into the brake system, carrying dirt and oil with it, which gums up the brake valve and triples and prevents the brakes from working properly. There is also danger, in winter, of the water freezing and stopping up the pipes. The water that gets into the brake system is mostly drawn into the air end of the pump with the air. This is especially true on damp and rainy days. The main reservoir is sometimes located between the frames under the deck, sometimes on top and at the back of the tender, and frequently under the cab running board. It is also occasionally seen on top of the boiler, back of the bell.

When the main reservoir is located on the tender, it is necessary to run a line of pipe from the pump back to the tender, and a return pipe from the main reservoir to the engineer's valve. This proves rather expensive, the more especially as dirt and moisture settle in the hose connections between engine and tender and soon destroy them.

The objection to placing the main reservoir between the frames under the deck is that the reservoir is in the way when working at the wedges, boxes, and dampers.

It is not unusual to use two small main reservoirs, in which case the air should go from the pump to one of them, thence passing into the second one, and from there to the brake valve.

DUPLEX AIR GAUGE.

22. A **duplex air gauge,** which indicates both train-line and main-reservoir pressures, is located in the engine cab, in a position convenient for the engineer to see. This gauge, shown in views (*a*) and (*b*), Fig. 2, consists really of two gauges combined in one, the same dial serving for both hands. The right-hand gauge, which, as seen, connects with *T*, operates the black hand. This hand is said to represent train-line pressure, although *T* really has a pipe connection to chamber *D* and the equalizing reservoir at *W*, Figs. 14 and 16; but the study of the engineer's valve will develop the fact that equalizing-reservoir and train-pipe pressures are usually equal. The other connection *M*, a part of the left-hand gauge, is piped to *R*, Figs. 14 and 16, so that this hand, colored red, indicates main-reservoir pressure.

23. **Principle of Working.**—An inside view of the air gauge is shown at (*b*), in which *A* and *B* are two bent tubes of elliptical shape, as shown at (*d*). The tube *B* is connected to the fitting *T*, and the tube *A* to the fitting *M*. The bottom ends of the tubes are held fast, but the top ends are free.

The **action of the gauge** may be thus explained: If a tube of elliptical section is bent as shown in view (*d*), and then

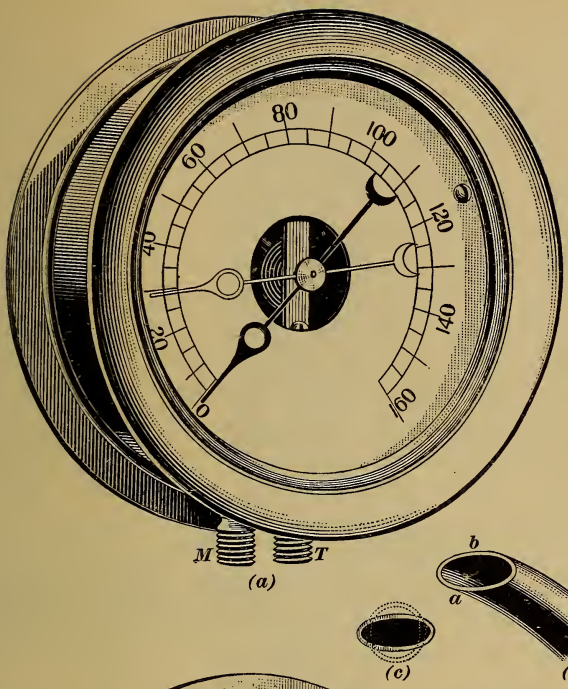

FIG. 2.

subjected to an internal pressure (of either a gas or a liquid), the force exerted will tend to straighten the tube. This is due to the fact that the force exerted within the tube tends to make it assume the circular form shown dotted in view (*c*). In assuming the circular form, the concave side *a* of the bent tube tends to lengthen, while the convex side *b* tends to shorten. These combined efforts tend to straighten the tube out, and therefore impart a movement to its free end.

Tube *A* is connected to one end of the lever *kj* by means of the link *c*. This lever is pivoted at *e*, and the end *j* forms a toothed sector that meshes with a pinion on the spindle *i*. The spindle *i* carries the red hand, or pointer, of the gauge, and rotates within a hollow spindle *l*, which carries the black hand. Tube *B* is connected by link *b* to the lever *fg* at a point below the fulcrum, or pivot, so that the black hand will be turned in the same direction as the red one. The lower end of the lever *fg* takes the form of a toothed sector that meshes with a pinion on the hollow spindle *l* and operates the black hand.

24. Operation of Gauge.—Since the main reservoir connects with *M*, air under pressure enters tube *A* and tends to straighten it out. This causes the free end of *A* to move to the left, drawing the link *c* with it, thus moving the toothed sector *j* to the right. As this sector engages with the spindle *i*, the latter is made to move clockwise—that is, to have a motion in the same direction as the hands of a clock. The red hand is also given a similar motion.

Train-pipe pressure acts within the tube *B* to straighten it, and the free end is moved to the right. As the bar *b* is connected *below* the fulcrum of the lever *fg*, the movement of the free end *B* will cause the toothed sector *g* to move to the right and turn the black hand clockwise also. The greater the pressure within the tubes, the greater will be the tendency for them to straighten out, and the higher will be the pressure registered by the gauge; *d* and *h* are small coiled springs to take up the play or backlash in the teeth of the sector and pinion.

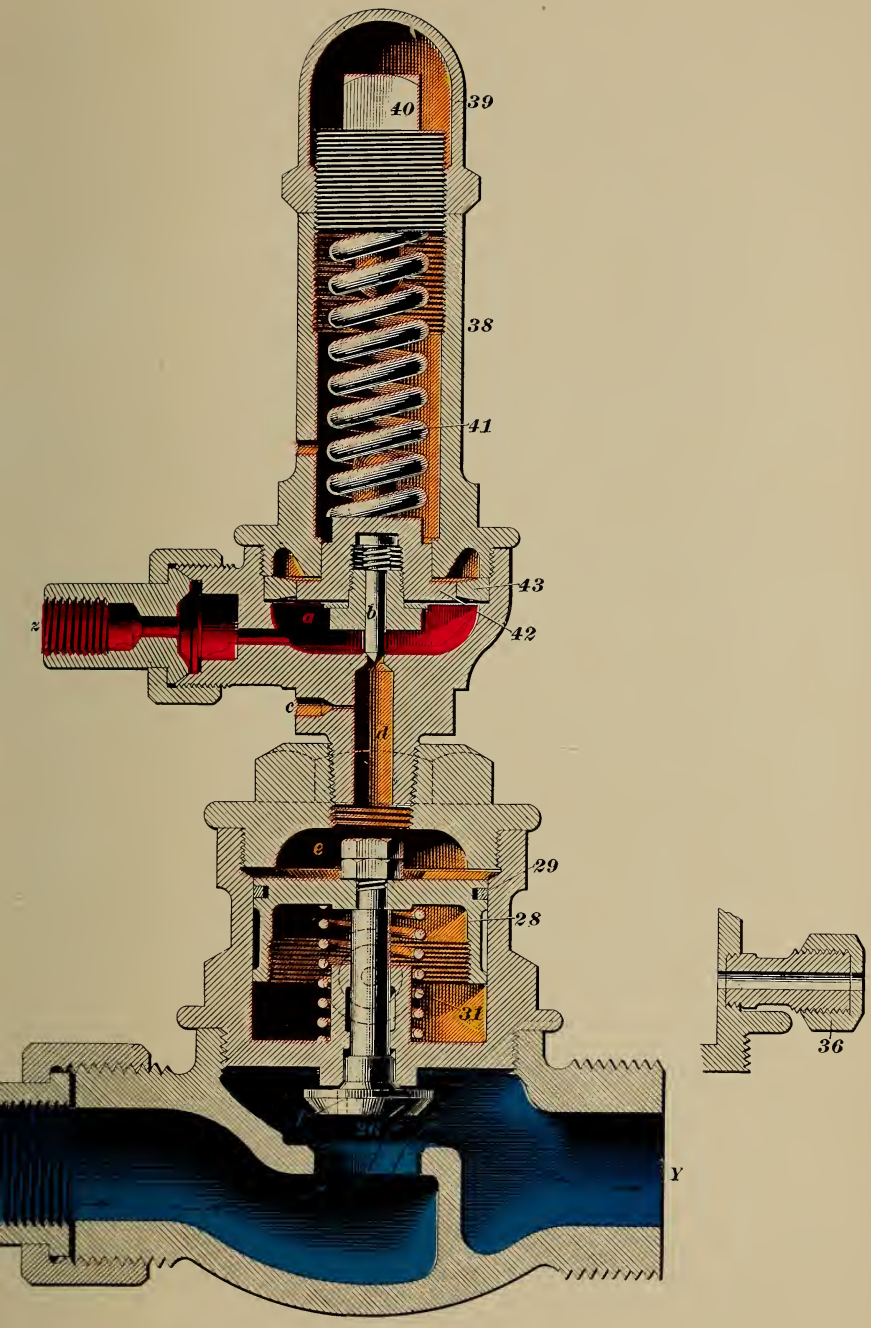

FIG. 3.

PUMP GOVERNORS.

DESCRIPTION.

25. The operation of the old style of pump governor, Fig. 4, is so nearly similar to that of the improved type, Fig. 3, that a description of the latter will suffice for both. The characteristics of the two governors will be considered later on.

The steam-supply pipe to the air pump leads from the top of the dome to a throttle, usually conveniently situated in the cab. From the throttle, the pipe leads to the steam connection *X*, Figs. 3 and 4, of the **pump governor,** the other connection *Y* of which is piped to the pump, as shown in Fig. 1. In order to reach the pump, all steam must pass through the pump governor, whose function is to shut off steam from the pump when the desired air pressure is obtained, and to admit it again when the air pressure falls below the amount desired.

When used in connection with a D-8 engineer's brake valve having an excess-pressure valve, the governor is connected to, and operated by, train-pipe pressure, the pipe connection being made to *z*, Figs. 3 and 4. When used with the F-6 brake valve having the feed-valve attachment, the governor is operated by main-reservoir pressure, the pipe connection to the governor being made at *z*, as before.

26. Referring to Fig. 3, it will be seen that chamber *a* is in direct communication with the pipe connection *z* that leads to the main-reservoir pressure when used with the F-6 brake valve. *42* is a brass diaphragm that, in moving, operates the pin valve *b*. *41* is a regulating spring that tends to drive the diaphragm *42* down with a force just a trifle less than the pressure in *a* at which the governor is intended to operate. *28* is the governor piston, to which the steam valve *26* is attached by means of its stem and the locknuts. *31* is the piston spring, whose duty is to hold the steam valve *26* from its seat when there is no air pressure above piston *28*; it does this by forcing the piston upwards, carrying the valve *26* along. *29* is a packing ring, made a sufficiently good fit to prevent any serious

leakage of air from chamber *e* past the piston. In the old style of governor, Fig. 4, the packing ring *24* was made loose so that air would leak past piston *5*. This point, however, will be taken up again when describing the operation of the governor.

The dotted circles seen below governor piston *28* show where the drip-pipe connection *36* is made. The position of the drip pipe on the old governor is also shown by dotted circles. The object of a drip pipe is to permit the escape to the atmosphere of any air that leaks past the ring *29* or of any steam that leaks up by the stem of the steam valve *26*, instead of allowing it to collect under piston *28*.

A small port *f* is drilled in the new governor steam valve *26*. Its purpose is to maintain a circulation of steam in the supply pipe, and to keep the pump working slowly, thereby keeping the latter warmed up and preventing, to a great extent, the condensation of steam when the pump is started. If the pump were inactive for some time after full main-reservoir pressure had been attained, steam would condense, and the condensation would be thrown out of the stack, upon the engine jacket, when the pump next started to work.

In the following explanation, it will be assumed that the governor is to be used with the F-6 brake valve, and, therefore, is operated by main-reservoir pressure.

OPERATION OF GOVERNOR.

27. The regulating spring *41* is, as a general practice, adjusted so that it will just withstand a main-reservoir pressure of 90 pounds pushing upwards on the diaphragm *42* (see Fig. 3). When the pump is in operation, the pressure in the main reservoir, and, consequently, in chamber *a* of the governor, increases until a pressure of 90 pounds is reached. When the pressure in chamber *a* just slightly exceeds the pressure exerted by the regulating spring *41*, the diaphragm *42* is raised, carrying the pin valve *b* with it. The air in chamber *a* passes by the unseated pin valve *b*, down through port *d*, and into chamber *e* on top of the piston *28*, forcing it down and thus seating the steam valve *26*. As long as main-reservoir pressure

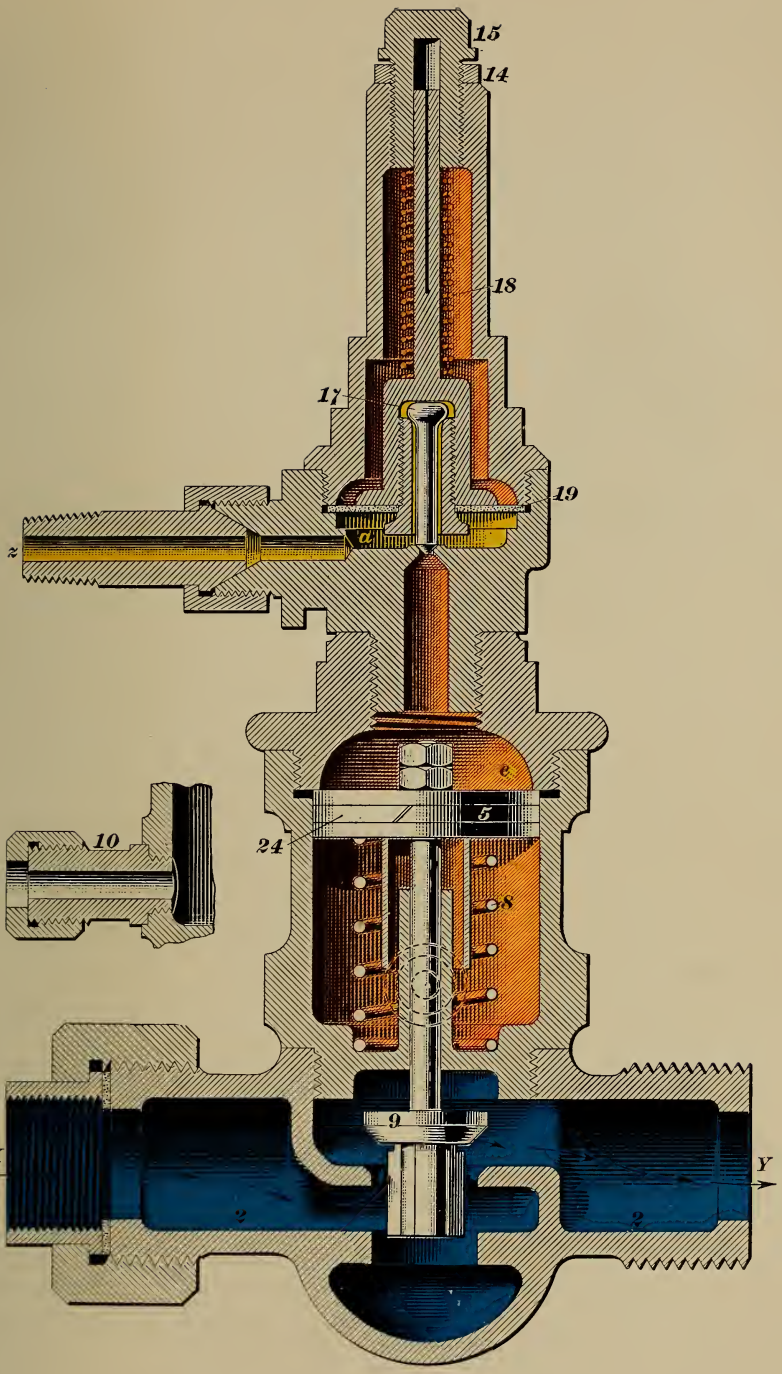

FIG. 4.

remains at 90 pounds, the diaphragm *42* will hold the pin valve *b* from its seat, and the pressure in chamber *e* will hold the steam valve *26* to its seat. If the main-reservoir pressure falls below 90 pounds, the thrust of the spring tending to force the diaphragm *42* down will overcome that of the air in chamber *a* tending to force it up. Consequently, the diaphragm will move downwards and thus seat the pin valve *b*.

This shuts off the air supply from chamber *e*, and the air confined therein by the pin valve closing will escape to the atmosphere through the relief port *c*. The pressure now being removed from above the piston *28*, the spring *31*, aided by the steam under valve *26*, forces the piston upwards, unseating valve *26*, and allowing steam to pass through the governor to the pump. The piston *28* is made sufficiently larger than the steam valve *26* to enable a moderate air pressure to easily hold valve *26* to its seat against the combined upward force of the steam pressure under the valve and the push of spring *31*.

28. The operation of the governor is the same, whether used with the F-6 or with the D-8 brake valve. In the former case, however, the governor is operated by main-reservoir pressure; whereas, in the latter case, it is operated by train-pipe pressure. In this case, the spring *41* must be adjusted to just withstand an upward pressure on the diaphragm *42* equal to train-pipe pressure, usually 70 pounds.

In the *old-style* governor, as soon as the pin valve *17* closes, the air entrapped above piston *5* leaks by the packing ring *24* (which is purposely made a loose fit), and escapes through the waste-pipe stud *10* located in the casting, as shown by the dotted circles. The rapidity with which the air above piston *5* will escape and permit the governor to operate, depends on the fit of packing ring *24*. In some cases, the leakage is so slow that fully half a minute elapses after the pin valve is closed before the governor starts the pump.

The *improved* governor is provided with a relief port *c*, Fig. 3, the object of which is to enable the governor to start the pump promptly when the pressure in chamber *a* allows the pin valve *b* to close. The relief port communicates with chamber *e*,

and is of such a size as will, in two seconds after the pin valve closes, release sufficient air from above piston *28* to enable the governor to start the pump. This port permits a constant leakage of air from chamber *a* as long as the pin valve is open, which is usually sufficient to keep the pump running slowly.

The small port *f* drilled through the steam valve *26* in the improved governor is provided, as has already been stated, to allow sufficient steam to pass to the pump when the steam valve is closed, to make the pump take a stroke or two occasionally, thus keeping it warmed up. In the old governor, the pump ceases to work after full pressure is attained, except so far as may be required to supply any leaks in the brake system that would otherwise reduce the train-pipe pressure below 70 pounds.

THE 8-INCH AIR PUMP.

29. Fig. 5 shows a cross-sectional view of the Westinghouse **8-inch air pump** as used at the present time. In the illustration, *3* is the **steam cylinder,** and *2* its head; *4* is the **centerpiece** that forms the bottom head of the steam cylinder and also the top head of the air cylinder, *6* being the lower head of the latter cylinder.

We shall first describe the steam cylinder and head, and explain its mode of working—then deal with the air cylinder.

THE STEAM CYLINDER.

30. Description.—On referring to Fig. 5, two pistons *7* and *7′* of unequal diameters will be observed, connected together by the stem *7″*, the whole forming what is known as the **main steam valve;** *8* and *9* are the upper and lower main-valve packing rings, respectively; *10* is the steam piston and *10′* the piston rod, to the lower end of which is connected the air piston *11*. The steam end of the piston rod *10′* is made hollow to receive the reversing rod *17*, which works up and down inside it. *12* and *13* are piston packing-rings; *23* is the reversing piston, which is $\frac{1}{8}$ inch larger in diameter than piston *7*; *24* is

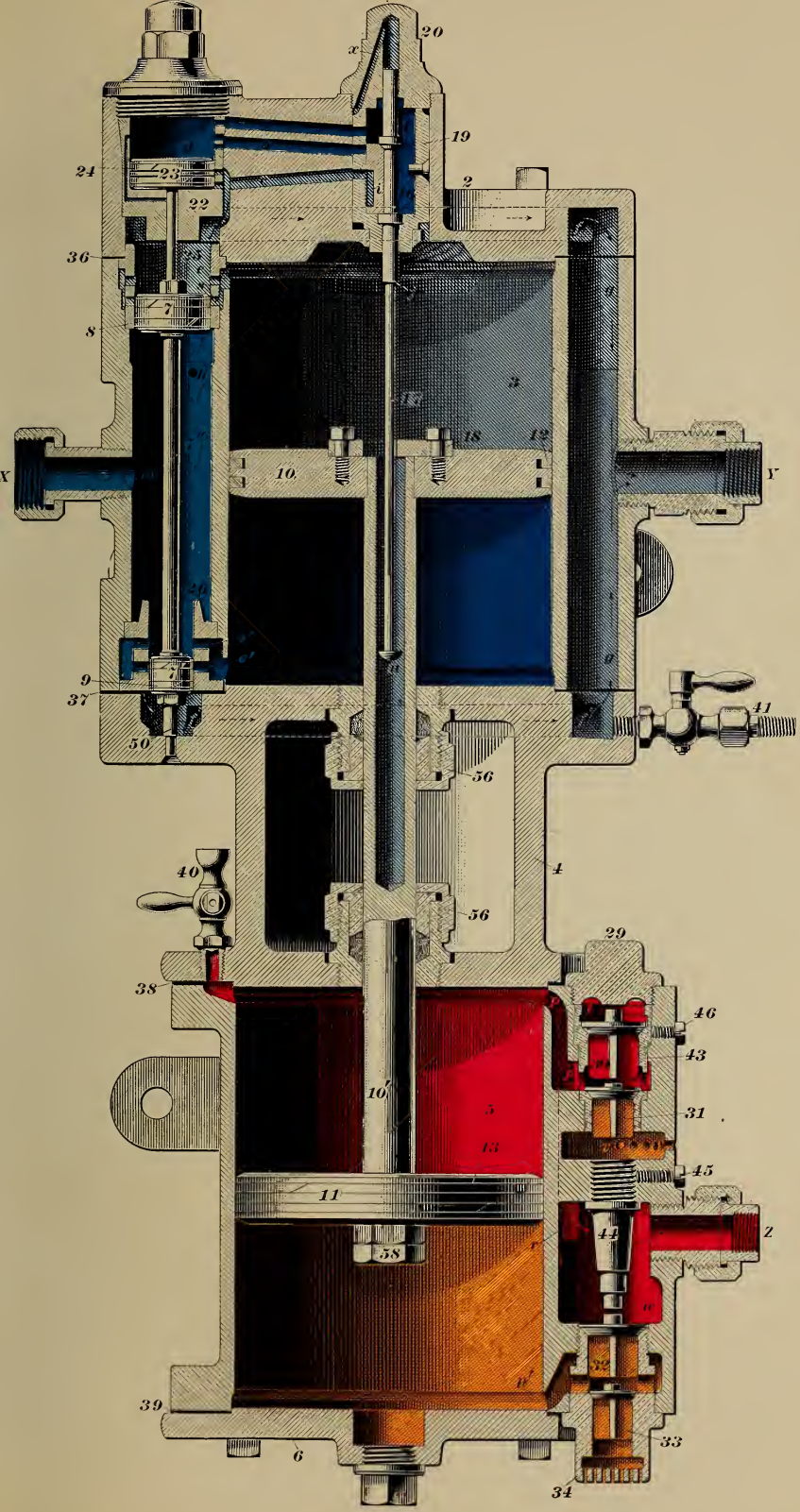
20
x
19
24
23
22
2
36
8
3
18
12
10
X
Y
9
37
41
50
56
40
4
56
29
38
46
43
10'
5
31
13
45
11
44
Z
58
32
39
33
6
34

FIG. 5.

the reversing-piston packing ring; and *16* is the reversing slide valve, which is brought into play to reverse the movement of the steam piston *10*.

31. The **main valve,** which is also called a **differential valve,** controls the admission to, and the exhaust of steam from, cylinder *3*. It works inside the bushings *25* and *26*, contained inside chamber *m*, one at each end. Each bushing has two rows of ports (circular holes) *s*, *e*, and *s'*, *e'*, respectively. The ports *s* and *s'* are the admission ports, and *e* and *e'* are the exhaust ports. The stop-pin *50* prevents the main valve from dropping below the bushings *25* and *26* far enough for the packing rings *8* and *9* to expand and so prevent the valve from taking an upward stroke. The steam-supply pipe from the pump governor is connected to the pump at *X*, and, all the time the pump is operating, chamber *m* is full of steam, and acts as a steam chest for the steam cylinder *3*. Port *h* in chamber *m* leads to chamber *l* in the reversing-valve bushing *19*, which serves as a steam chest to furnish steam to the space above the reversing piston in chamber *d*. The **reversing valve** *16*, which works inside the reversing-valve bushing *19*, moves up and down with the reversing rod *17*, any movement of the rod causing a corresponding one in the reversing valve. The **reversing piston** *23* works in the bushing *22*, and has a stem that passes through the bushing and bears on the main valve stem *7''*.

32. The upper end of the reversing rod works freely inside the cap nut *20*. One end of port *x* opens into the top of the cap nut, and the other end connects with a passage that runs down alongside the reversing-valve bushing *19* and thence into top of steam cylinder *3*. This port, in conjunction with the passage, serves two purposes: it prevents both a back pressure and also a vacuum from forming in the cap nut above the end of the reversing rod as the latter works up and down; and it also allows steam to work through from steam cylinder *3*, and thus supply the necessary lubrication for the rod end. *36*, *37*, *38*, and *39* are copper gaskets, forming the joints between the cylinders, heads, and centerpiece, as shown. *41* is a drip cock

that should be opened when the pump is first started, to get rid of any condensation. *56*, *56* are the gland nuts.

33. Operation of Steam Cylinder.—When the pump is not working, there is a tendency for the steam and air pistons and also the main valve and reversing valve to settle down to their lowest positions.

When the pump throttle is first opened, steam enters chamber *m* and exerts an upward pressure on piston *7*, and a downward pressure on piston *7'*. Since the area of piston *7* is greater than that of piston *7'*, the steam pressure would force the main valve upwards, were it not for the fact that steam from chamber *m* passes through port *h* into chamber *l* in the valve bushing *19*, and thence through port *a* into chamber *d* above the reversing piston *23*. The downward pressure that the steam exerts on piston *23* is transmitted through its stem to the main valve *7''*, and it thus balances the upward push of the steam in chamber *m* on piston *7*, as both pistons are nearly the same size, and are acted on by the same steam pressure. The two upper pistons *23* and *7* being thus nearly balanced, the downward pressure acting on the small piston *7'* suffices to hold the main valve down in the position shown. While in this position, steam from chamber *m* passes through the lower admission ports *s'* into the steam cylinder underneath piston *10*, forcing it up. Any steam that is above the piston *10* passes through the exhaust port *e* of bushing *25*, thence on into the exhaust passage *ff* across the top head of the pump, as shown by the dotted lines, into the chamber *g* and out to the exhaust at *Y*. Just before piston *10* reaches the end of its upward stroke, the reversing plate *18* strikes the shoulder *j* on the reversing rod *17*, and the rod and reversing valve *16* are moved upwards until the valve *16* closes port *a*, and, by means of the cavity *i*, connects the exhaust port *b* with port *c*. The steam above the reversing piston *23* now exhausts through port *b*, exhaust cavity *i*, and port *c*, thence through the exhaust passage *ff* into chamber *g*, and out at *Y*. The pressure is thus exhausted from chamber *d*; and, as the upward force exerted by piston *7* of the main valve is greater than the downward force exerted by piston

7′, the main valve moves upwards, closing ports *s′* and *e*, and opening ports *s* and *e′*. Steam from chamber *m* then passes through the steam ports *s* into the steam cylinder above piston *10*, which, consequently, is forced downwards. The steam below piston *10* passes out through the exhaust ports *e′* in bushing *26*, through the passage *f′ f′* into *g*, and thence out of the exhaust at *Y*.

Just before piston *10* reaches the end of its downward stroke, the under side of the reversing plate *18* strikes the button *u* on the end of the reversing rod *17*, and the reversing valve *16* is moved down to the position shown. This closes the exhaust port *b*, and opens the steam port *a*, admitting steam once more from chamber *l*, through port *a* into chamber *d*. The combined downward pressure on the reversing piston *23* and the piston *7′* is now greater than the upward force acting on piston *7*, and the main valve moves down, so that steam from chamber *m* is again admitted through ports *s′* into the cylinder below piston *10*, forcing it upwards once more, the ports *e* exhausting the steam from above the piston. This completes a full stroke in the steam end of the pump.

THE AIR CYLINDER.

34. Description.—In the **air cylinder,** as shown in Fig. 5, *31* and *33* are the receiving valves; *30* and *32* are the discharge valves. The port *p′* leads from the bottom end of the air cylinder to the space between the valves *32* and *33*, and port *p* leads from the top end of the air cylinder to the air space between valves *30* and *31*. The space *t* above the top discharge valve *30* is in direct connection with chamber *w*, by means of a passage in the body of the cylinder, which enters this chamber at *r*. Air enters the lower end of the cylinder through the air inlets in the lower valve-chamber cap *34*, and air for the upper end of the cylinder enters through the air inlets *r*, just below the receiving valve *31*.

35. The **receiving valves** should have a lift of $\frac{1}{8}$ inch, and the **discharge valves** one of $\frac{3}{32}$ inch. The lift of the

valve *30* is regulated by the distance between it and the cap nut *29*; the lift of valve *31* is regulated by the distance between the top of itself and the bottom of valve *30*; the discharge-valve stop *44* regulates the lift of valve *32*, and is itself held in position by the setscrew *45*. The lift of valve *33* is regulated by the distance between itself and the bottom of valve *32*; *40* is the oil cup through which the air cylinder may be oiled. If the cup is filled and the cock opened *while piston 11 is descending*, the oil will be drawn in; or, oil may be poured in when the pump is idle.

36. Operation of Air Cylinder.—As the steam piston is forced up and down, the air piston *11* is carried with it. When the air piston *11* is on its up stroke, the air above the piston is compressed and the tendency is to form a partial vacuum below the piston. The air compressed above the piston passes through port *p p* and in between the valves *30* and *31*, forcing the latter on to its seat and, as soon as the pressure beneath valve *30* is greater than the main-reservoir pressure on top of it, forcing this valve from *its* seat, and flowing into space *t*, thence into port *r* and down into chamber *w*, from whence it passes out at *Z* into a pipe leading to the main reservoir. Main-reservoir pressure in chamber *w* is holding the lower discharge valve *32* on to its seat, and just as soon as the partial vacuum under piston *11* (due to its upward movement) is sufficiently great, the pressure of the atmosphere forces the lower receiving valve *33* from its seat and passes through port *p'* into the cylinder, filling the space beneath piston *11* with air at atmospheric pressure.

By the time the air piston has reached the top of its cylinder, the main valve will have made its upward stroke and cut off steam from the bottom side of steam piston and admitted it to the top, thus reversing the motion of the steam piston and, therefore, of the air piston also. As the air piston moves downwards, it tends to form a partial vacuum behind it, and to compress the air in front of (i. e. beneath) it. The air that is being compressed below the piston passes through port *p'*, forcing the receiving valve *33* to its seat, and, as soon as the

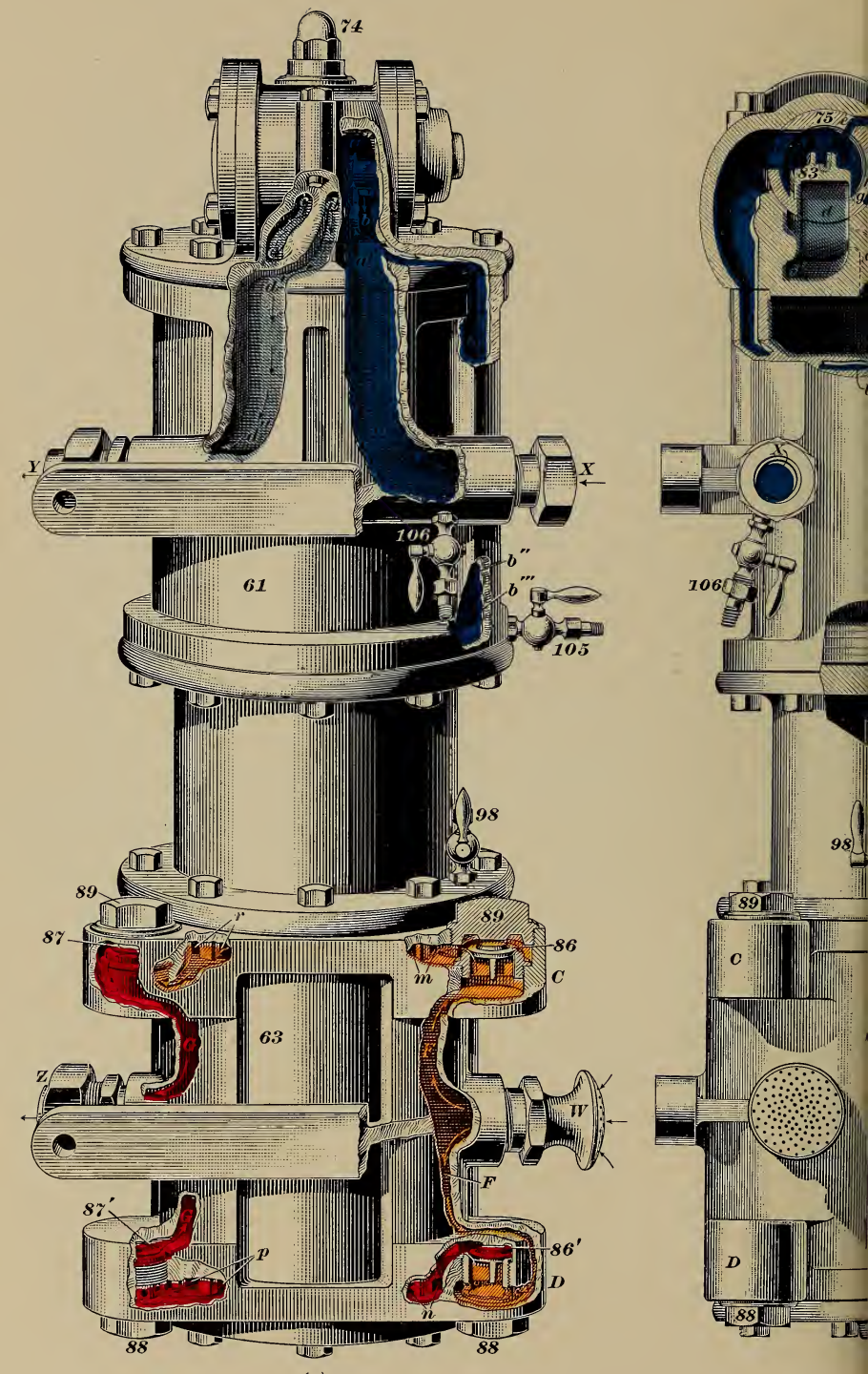
74
Y
X
106
b″
b‴
61
105
98
89
87
r
89
86
m
C
63
Z
IV
F
87′
p
86′
D
n
88
88
75
106
98
89
C
D
88

(c)

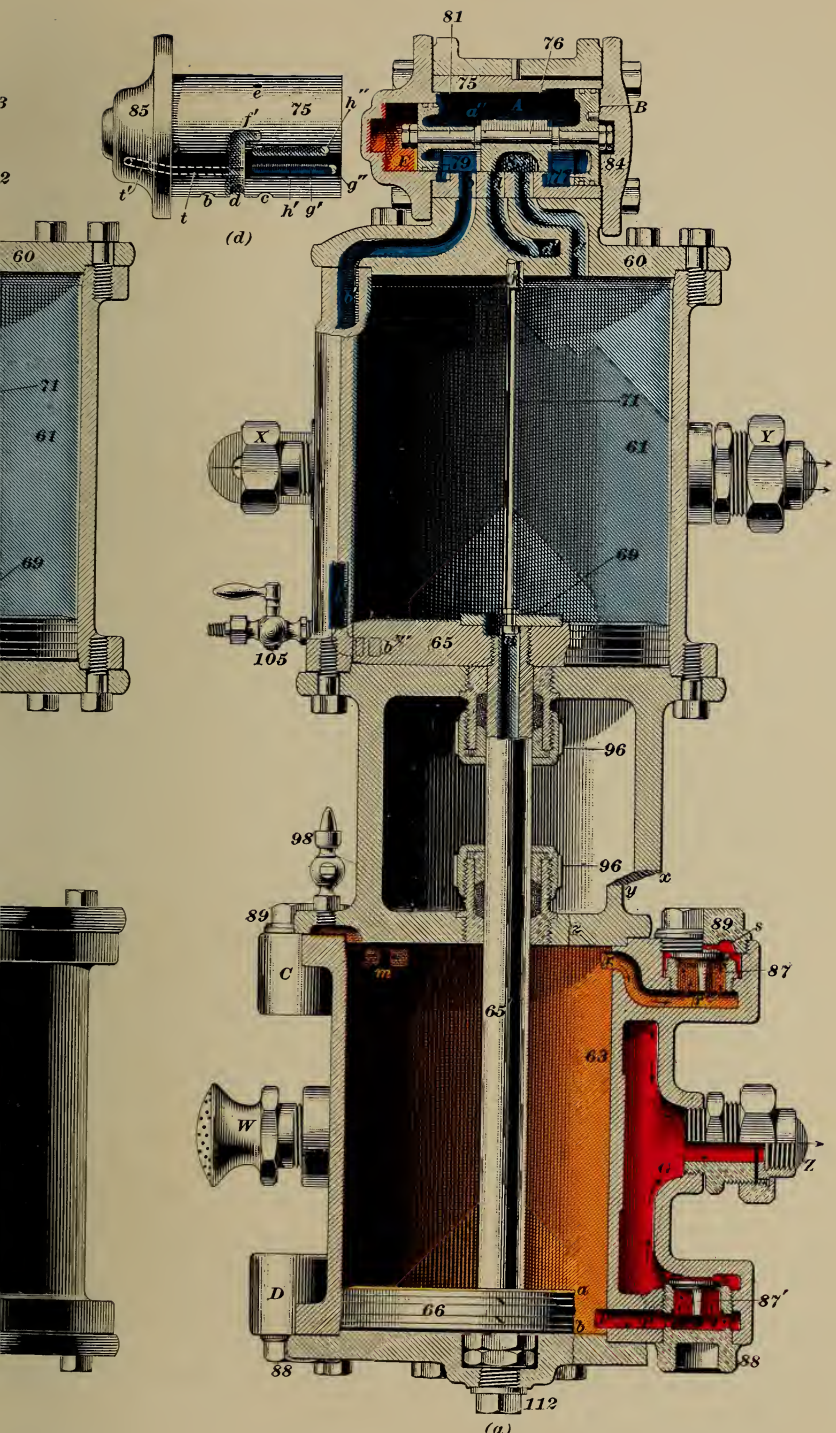

81
76
75
85
75
e
f'
h''
g''
t'
t
b
d
c
h'
g'
(d)
B
A
a''
E
79
77
84
60
60
71
61
71
61
X
Y
69
69
105
65
96
96
98
x
y
89
89
s
87
C
m
65
63
W
Z
D
66
a
b
87'
88
88
112
(a)

pressure beneath the lower discharge valve *32* is greater than the (main-reservoir) pressure in chamber *w* above it, forcing this valve from its seat and flowing into chamber *w* and out to the main reservoir at *Z*. As already mentioned, a partial vacuum has been formed in the space above piston *11* and in port *p p*, and atmospheric pressure forces air in to fill this space, entering the holes at *v*, and raising the top receiving valve *31* from its seat, thence passing through port *p p* and filling the upper part of the air cylinder with air at atmospheric pressure. The motion of the pump is again reversed as the piston nears the bottom of the cylinder, and, in moving upwards, it compresses the air that has just been "sucked in" above the piston and forces it into the main reservoir. A complete cycle of the movements of the pump has now been traced.

THE 9½-INCH AIR PUMP.

37. As the custom of equipping freight cars with the air brake became more and more general, an engineer often found himself called on to handle as many as 60 air-brake cars in a single train; it therefore became imperative that a pump of greater capacity than the old 8-inch pump should be employed. To meet this demand, the *9½-inch air pump* was brought out.

38. Three views of the Westinghouse **9½-inch air pump** are given in Fig. 6. (*a*) is a cross-sectional view, showing the front half of the pump removed; an additional portion of the centerpiece and air cylinder *x y z* is also shown broken away, so that a view of the discharge air-valves, valve cases, and air passages may be presented. (*b*) is a side view, showing a section through the valve gear in the upper steam-cylinder head; a portion of the steam cylinder also is shown broken away. (*c*) is a back view, in which portions of the steam and air passages and of the air-valve cases are broken away to give a clearer idea of the location of the valves, ports, and passages. The steam-supply pipe is connected to the pump at *X*, the exhaust pipe at *Y*, and the air-discharge pipe to the main reservoir at *Z*.

THE STEAM CYLINDER.

39. Description.—In Fig. 6, *61* is the *steam cylinder* and *63* the *air cylinder*. The steam piston *65* and air piston *66* are connected by piston rod *65′*, the upper part of which is hollow, as in the 8-inch pump. In the 9½-inch pump, all the steam valve gear, except reversing rod *71*, is contained within the upper steam-cylinder head *60*. This is a great convenience, for, should the valve gear get out of order, a new head can be substituted for the defective one in a few minutes.

Three views of the **main-valve bushing** *75* are given, namely, a longitudinal section in view (*a*), a transverse section in view (*b*), and an outside elevation in view (*d*), showing the bushing removed from the steam-cylinder head. In this latter view is also shown the main-valve head *85*. The ports *b* and *c* pass through the bushing, and are the steam ports for the slide valve *83*, views (*a*) and (*b*). The port *d* also passes through the bushing, and is the exhaust port for the slide valve *83*. The groove *f′* connects with the exhaust port *d*. Grooves *h′* and *g′* connect with the ports *h″* and *g″*, which open into chamber *B*, the space between piston *77* and the cylinder head *84*. A passageway *t* in the bush and *t′* in the main-valve head *85* (represented by dotted lines) establishes communication between chamber *E* in the main-valve head and the exhaust groove *f′*; chamber *E*, therefore, is in constant communication with the atmosphere through passages *t′* and *t*, groove *f′*, and exhaust port *d*. Any steam that may leak past the piston *79* is thus prevented from accumulating in chamber *E*, where it would prevent the main valve *76* from taking a stroke to the left. The port *a″* connects chamber *A*—the space within the bushing *75*—with the steam-supply passage *a′ a*, views (*b*) and (*c*); consequently, this chamber, which acts as a steam chest for the slide valve *83*, is always filled with steam as long as steam is turned on to the pump. Port *e* connects with the passage *e′*, which leads into the reversing-valve bushing *73*; therefore, this bushing, which acts as a steam chest for the reversing valve *72*, is also filled with steam as long as the pump is supplied with it.

The steam port *b* in bushing *75* connects with the steam passage *b' b''*, which opens into the lower end of the steam cylinder below the piston at *b'''*, views (*a*), (*b*), and (*c*). The other steam port *c* connects directly with the upper end of the steam cylinder through the passage *c'*. The exhaust port *d* connects with the passage *d' d''*, views (*a*) and (*c*), which leads to the atmosphere through the exhaust connection *Y*.

40. Steam enters the pump at *X*, flows through the passage at *a a'*, views (*b*) and (*c*), and enters the main-valve bushing through the port *a''*. Three ports *f*, *h*, and *g*, in the reversing-valve bushing *73*, connect directly with the grooves *f'*, *h'*, and *g'*, in the main-valve bushing *75*, views (*b*) and (*d*). A reversing valve *72*, having a cavity *i* in its face, operates inside the bushing *73*. The duty of this valve is to admit steam to, and exhaust steam from, the space *B* between the piston *77* and head *84*, immediately before the piston valve *76* takes its stroke toward the left or right, respectively. The reversing valve *72* is held between two shoulders on the reversing rod *71*, so that if the rod is moved up or down, it moves the valve with it, as in the 8-inch pump. When the reversing valve is in the position shown in view (*b*), it closes port *g*, and the cavity *i* connects port *f* with port *h*; hence, chamber *B* is open to the atmosphere, and any steam in there can exhaust through port *h''*, groove *h'*, port *h*, cavity *i* in slide valve, port *f*, groove *f'*, and exhaust port *d*. When the reversing valve is moved up to its highest position, port *g* is open and the part *k* of the valve covers ports *f* and *h*. Steam can now flow through port *g*, groove *g'*, and port *g''* into chamber *B*, whence it cannot escape into the exhaust, owing to the ports *f* and *h* being closed.

41. The **main valve** *76* consists of two pistons *77* and *79* of unequal diameter, connected by the valve stem *81*. The small piston *79* works to and fro in the main-valve head *85*, piston *77* working in the main-valve bushing *75*. The slide valve fits between two shoulders on the main-valve stem *81*, and, therefore, whenever the piston valve moves, it carries the slide valve with it.

42. It is thus seen that the 9½-inch pump contains three steam valves: the slide valve *83*; the main valve *76*, called a differential piston valve; and the reversing valve *72*. The duty of the slide valve *83* is to regulate the admission of steam to, and the exhaust of steam from, the upper and lower sides of the piston *65*, as required. It is a valve of the ordinary D type, and is similar to the slide valve of a locomotive; however, as in the case of the latter valve, some means must be provided for moving it back and forth as required, and it is the duty of the main valve *76* to so move it.

The duty of the **reversing valve** *72* is to admit steam to chamber *B* when the main valve is to make a stroke to the left (i. e. as viewed in the illustration) and to exhaust the steam therefrom when the main valve is to make a stroke to the right. If the steam is exhausted from chamber *B*, the main valve will naturally take a stroke to the right, since the steam in chamber *A*, which acts on both pistons, exerts a greater force on the larger piston *77*. To make the main valve take a stroke to the left, it is necessary to admit steam into chamber *B*; this acts against, and balances, the pressure exerted on piston *77* by the steam in chamber *A*, and the pressure of the steam on the small piston *79* will then move the main valve to the left.

43. Operation of Steam Cylinder.—When the pump is at rest, the pistons *65* and *66* generally settle to the bottom of their cylinders, and the reversing plate *69* strikes against the button *u* on the reversing rod *71* and pulls the reversing valve *72* down into the position shown in view (*b*). As soon as steam is admitted to the pump, it enters chamber *A* in the main-valve bushing, forces the main valve to the right, as shown in view (*a*), passes down through port *b* and passage *b' b''*, views (*a*) and (*c*), and enters the cylinder below piston *65* through the ports *b'''*, forcing the piston upwards. Any steam that may be above the piston *65* will exhaust through the passage *c'*, port *c*, the cavity in the slide valve, port *d*, passage *d' d''*, and out at *Y*. As the steam piston *65* nears the end of its upward stroke, the top of the reversing plate *69* strikes the shoulder *j* on the reversing rod *71*, and forces reversing

valve *72* upwards until it opens port *g*, and the part *k* of the valve covers ports *h* and *f*. This permits steam to enter chamber *B* and balance the pressure on piston *77* of the main valve, and the pressure on piston *79* then forces the main valve, and with it the slide valve *83*, to the left until the cavity of the slide valve *83* connects port *b* with exhaust port *d*. When the slide valve is in this position, the steam port *c* is uncovered and steam from chamber *A* flows down through the passage *c c'*, into the steam cylinder above the steam piston, forcing the piston downwards. The steam below the piston then flows through the ports *b'''*, up through passage *b'' b'* and port *b*, views (*a*) and (*c*), through the cavity in the slide valve, down through port *d* and passage *d' d''*, and out of the exhaust at *Y*. As the piston nears the end of its downward stroke, the bottom of the reversing plate *69* strikes the button *u* on the reversing rod *71* and pulls the rod and reversing valve downwards to the position shown in view (*b*). This movement of the valve, as already explained, exhausts the steam from chamber *B*, and allows the piston valve *76* to move the slide valve to the right into the position shown, thus permitting steam to pass underneath piston *65* and force it upwards. What next occurs, during the upward stroke, has already been explained. The reversing cap nut *74*, which acts as a guide for the reversing rod *71*, has a passage *x* that connects with another passage leading into the upper end of the steam cylinder. As in the 8-inch pump, this passage prevents either a back pressure or a vacuum from forming in the cap nut, and it also admits steam above the reversing rod, thus insuring a certain amount of lubrication for the rod end. Two drain cocks *105* and *106*, located in the steam passages *b''* and *a*, are provided for the purpose of removing condensed water. They should be opened when the pump is first started and kept open until it is thoroughly warm. *96*, *96* are the gland nuts by means of which the piston-rod packing is adjusted.

THE AIR CYLINDER.

44. Description.—A side view of the *air cylinder 63* is shown in view (*b*) Fig. 6; a rear view will be seen in (*c*); while view (*a*) shows the cylinder with the front half removed and a portion of the rear half broken away, so as to show the discharge air-valves and passages. The piston *66* is broken away at *a b* so that port *p*—where passage *p'* enters the air cylinder—may be seen. The receiving air valves are contained within the valve cases *C* and *D*. The lift of both the receiving and discharge valves of this pump should be $\frac{3}{32}$ inch. Air enters the upper end of the cylinder through ports *m*, and the lower end through ports *n*. The air leaves the upper end of the cylinder through ports *r*, and the lower end through ports *p*, passing in each case into chamber *G*, and thence out through *Z* to the main reservoir. An oil cup *98* is provided, through which oil may be supplied to the air cylinder. Oil may be poured through this cup while the pump is standing still, or it may be filled and the cock opened when the air piston is on its *downward* stroke; the partial vacuum in the upper end of the air cylinder will then cause the oil to be forced into the cylinder by the atmospheric pressure.

45. To remove the top steam-cylinder head *60*, it is necessary to raise the steam piston *65* in its cylinder until the reversing rod *71* can be disengaged from the piston and reversing plate. In order that the pistons may be easily raised, the plug *112* in air-cylinder head is provided on a number of pumps. A bar can be used through this opening, and the pistons raised very readily. This plug opening is useful in other ways also, as it enables the lower end of the air cylinder to be cleaned and the piston-rod nuts to be inspected. The pipe to the main reservoir is connected at *Z*, and main-reservoir pressure, therefore, is always acting to hold valves *87* and *87'* on their seats; to unseat them, the pressure below the valves must be greater than main-reservoir pressure.

46. Operation of Air Cylinder.—When the air piston *66* makes an upward stroke, it causes a partial vacuum to be

formed below it, while the air above is compressed. Air then flows in through the screened inlet *W*, and passes downward through the passage *F*, view (*c*), then through the receiving valve *86′* and ports *n*, as shown by the arrows, into the lower end of the air cylinder, filling it with air at atmospheric pressure. In the meantime, the air that is compressed above the piston holds receiving valve *86* on its seat, and passes out through ports *r* and the passage *r′* to the under side of discharge valve *87*, and, as soon as its pressure exceeds that in the main reservoir, raises valve *87* and flows through the passages *s* and *G* and out at *Z* to the main reservoir, as shown by the arrows. On the downward stroke of the air piston, a partial vacuum is formed above, and the air is compressed below it. Air then flows in through *W* and passes up the passage *F*, through receiving valve *86* and ports *m*, and fills the upper part of the cylinder with air at atmospheric pressure.

As the air is compressed below the piston, it holds receiving valve *86′* on its seat, and passes out through ports *p* and passage *p′* to the under side of discharge valve *87′*, and, as soon as it exerts a pressure slightly greater than main-reservoir pressure, opens valve *87′* and passes up through passage *G* and out at *Z* to the main reservoir.

THE PLAIN TRIPLE VALVE.

GENERAL REMARKS.

47. As mentioned in the introductory portion of this Section, the straight-air brake was in due time supplanted by the automatic brake. The essential part of the new style of brake was the triple valve, now known as the **plain triple valve,** to distinguish it from a later form known as the *quick-action triple valve*, to be described later. The plain triple is still in use on engines and tenders, and also on some of the very early car equipments. It is practically the same as the **service part** of the present quick-action triple, that is, the part of the latter that is used in making a service application of the brakes. These two kinds of triples are somewhat

differently constructed, but the results, actions, and parts employed in making a service application of the brakes are practically identical in each case. When the plain automatic triple was introduced, a great many cars were equipped with the straight-air brake, and it was necessary to so construct a triple valve that, if put in a train with a number of straight-air cars, the automatic feature of the triple could be cut out, and the brakes on that car used "straight air," as on the other cars.

DESCRIPTION.

48. In Fig. 7 are shown cross-sectional views of the plain triple valve introduced to accomplish the above purpose. The plug valve *13*, which effects the required changes, is actuated by the handle *15*. This handle may be placed in any one of the three positions *15*, *15'*, or *15''*, shown in the cut. As it now stands, in position *15*, the triple can be used with the automatic brake. When the handle stands in position *15'*, the plug valve *13* is moved so that the portions *p*, *l*, and *i*, of the plug cover the ports *a*, *f*, and *d*; the brake is then cut out entirely on that car. With the handle in position *15''* pointing downwards, the passage *e* in valve *13* connects port *a* with port *d*, thus enabling the triple to be used in the straight-air system. However, now that the straight-air brake is a thing of the past, a lug, not shown in the figure, is cast on the handle *15*, which prevents the handle from being turned to position *15''* to convert the brake into "straight air."

49. The other parts of the triple valve, as numbered in the figure, are: *1*, the triple body; *2*, the drain cup; *3*, the triple slide valve; *4*, the slide-valve spring; *5*, the triple piston; *6*, the triple-piston packing ring; *7*, the graduating valve; *8*, the upper cap nut; *9*, the graduating stem; *10*, the graduating spring; *11*, the graduating-stem nut; and *12*, a leather gasket. The space marked *C* is called the slide-valve chamber; *g* is the exhaust cavity in the face of the slide valve *3*; *k* is the triple exhaust port; *m* is a small feed groove in the piston bushing; and *n* is a groove in the shoulder of the triple piston itself. These grooves *m* and *n* allow air from the train line to

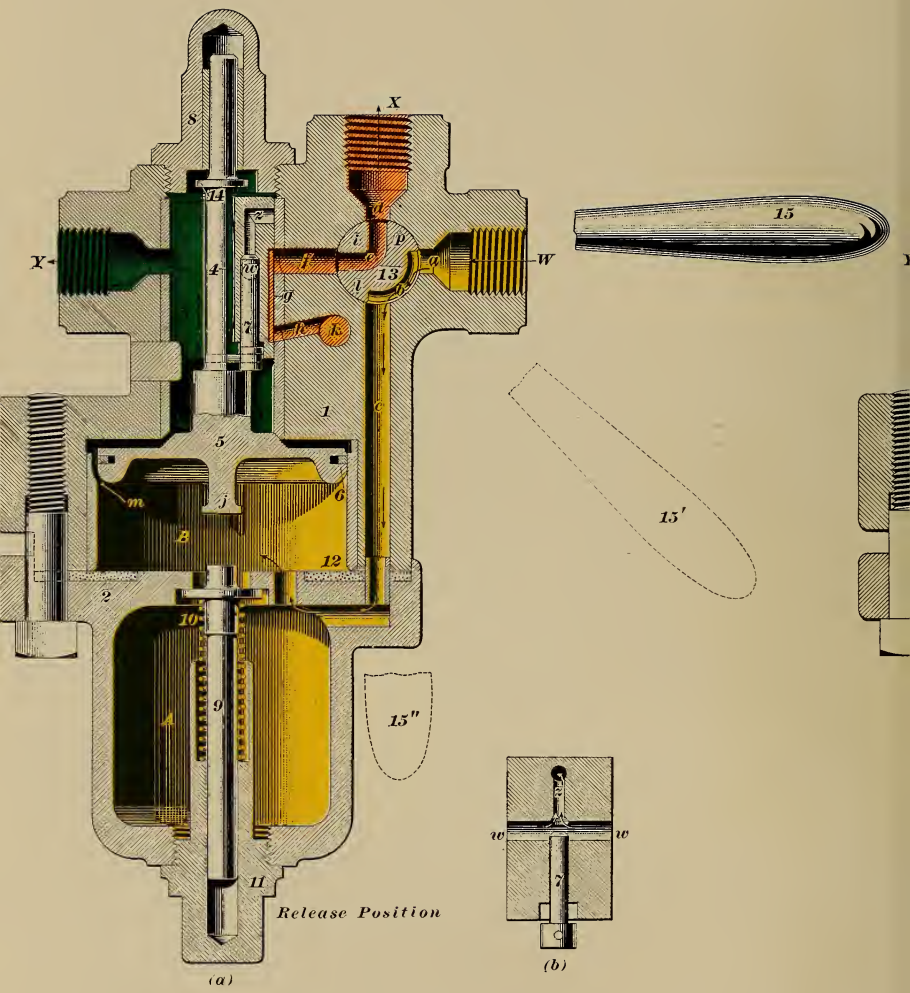
X
Y
W
15
15'
15"
Release Position
(a)
(b)

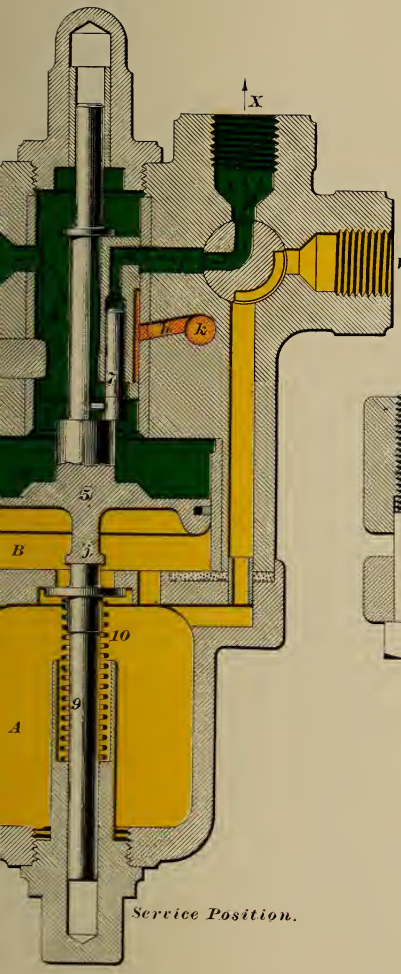

Service Position.

(c)

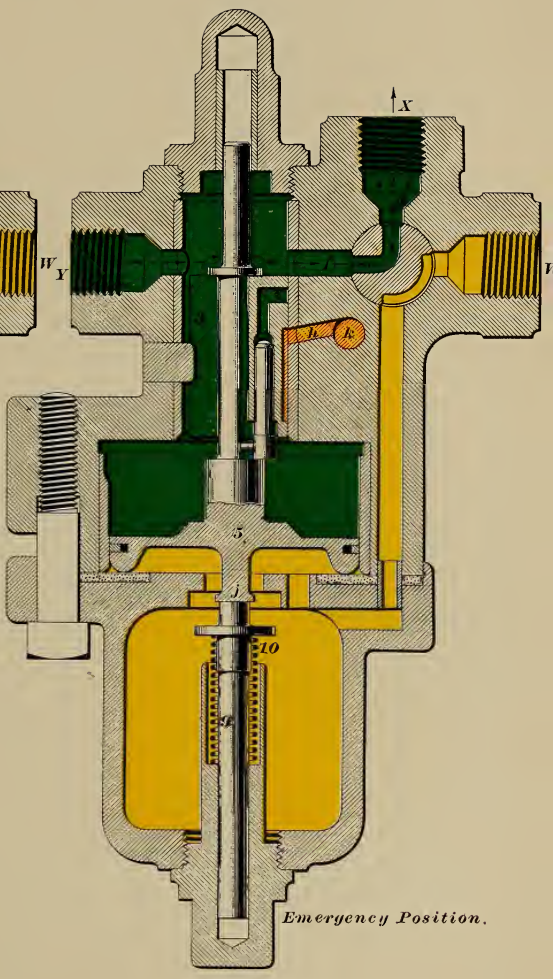

Emergency Position.

(d)

feed into the auxiliary reservoir when the triple piston is in release position. This piston *5* is acted on by pressure on both sides of it, moving away from the greater pressure when the two pressures are unequal, or remaining stationary when these pressures are equal. The branch pipe from the train line connects with the triple at *W*; the pipe leading from the brake cylinder connects at *X*, while the connection to the auxiliary reservoir is made at *Y*. In the tender equipment, Fig. 1, is shown a plain triple valve connected to the auxiliary reservoir, brake cylinder, and train line. Chamber *C*, as will be evident on studying the figure, is always charged with auxiliary pressure, and chamber *B* with train-line pressure, the piston *5* marking the line of separation between the two. The piston *5* may be moved up or down by increasing or decreasing the pressure in chamber *B* above or below that in chamber *C*. The packing ring *6* is made a good fit in the bushing, so that when the piston has moved down far enough to cover the groove *m*, air cannot readily pass by it in either direction.

ACTION OF PARTS.

50. The automatic portion of the mechanism of the plain triple consists of the slide valve *3*, graduating valve *7*, piston *5*, and graduating stem *9*. A sectional view of the slide valve *3*, showing the graduating valve and ports, is given in view (*b*). The port *w* passes through the slide valve from one side to the other. When the **graduating valve** *7* is off its seat, auxiliary air can flow through port *w* past the valve and out at *z*, but when the valve is on its seat, no air can escape through port *z*. Besides ports *w* and *z*, there is an exhaust cavity *g* in the face of the valve, as seen in view (*a*). The slide valve is surrounded by air at auxiliary pressure, which holds the valve to its seat. The spring *4* is provided to hold the valve to its seat when there is no auxiliary pressure to perform this duty, thus preventing dirt from collecting on the valve seat and affecting the working of the triple.

The piston *5* controls the movements of both the slide valve and the graduating valve. The slide valve fits loosely between

shoulders on the piston stem, and, when the piston moves far enough, it carries the slide valve with it. The graduating valve *7* is connected to the stem of piston *5* by means of a small pin, shown in view (*a*), the place where it enters the pin and stem being shown by dotted lines; thus, the graduating valve is fixed with respect to the piston *5* and moves along with it. The length of the slide valve *3* is purposely made less than the distance between the shoulders on the piston stem, so that the piston in moving downwards will open, or, in moving upwards will close, the graduating valve *7*, before it moves the slide valve *3*. When the slide valve is in service position, the piston *5* can move up and down far enough (about $\frac{3}{16}$ inch) to operate the graduating valve without disturbing the slide valve. We thus see that the piston may move a limited distance without moving the slide valve; whereas, the graduating valve, being secured to the piston stem by the small pin referred to above, must move with the piston.

51. The graduating stem *9* is held in position by the graduating spring *10*. When a gradual, or service, reduction of train-line pressure is made, the pressure in chamber *B* is reduced below that in chamber *C*, and auxiliary pressure then moves piston *5* down until its knob *j* touches the graduating stem *9*, when the spring *10* prevents its moving any farther. When a sudden and heavy reduction of train-line pressure is made, as in emergencies, a sufficient difference of pressures is established in *B* and *C* to cause piston *5* to move down quickly and compress spring *10*, the piston traveling the whole length of chamber *B* until it bottoms on the lower end.

The graduating nut can be removed when it is desired to drain the triple or to examine the graduating stem and spring. *w* and *z* form one continuous port through the slide valve *3*, as already explained in connection with view (*b*); this port is opened and closed by the graduating valve *7*, and is called the **service, or graduating, port.** When the triple is in *service position*, air from the auxiliary reservoir flows through the slide valve by means of this port, thence into port *f* and on through port *d* into the brake cylinder.

DUTIES OF THE TRIPLE VALVE.

52. The triple valve has three duties to perform: (1) to charge the auxiliary; (2) to apply the brakes; and (3) to release the brakes.

When an engine is coupled to a car, air from the main reservoir flows back into the train pipe, thence through the branch pipe (as shown in Fig. 1), entering the triple at *W*. When the triple is "cut in," the air can flow in at *W*, and on through ports *a*, *b*, *c* into chamber *A*, whence it passes into chamber *B*. If piston *5* were down, the air entering chamber *B* would force it up into release position, as shown in Fig. 7 (*a*). The feed groove *m* is now open, and air therefore feeds from chamber *B* past piston *5*, through the grooves *m* and *n* into the slide-valve chamber *C*, which communicates through *Y* with the auxiliary reservoir. The air continues to feed past piston *5* as long as train-pipe pressure in chamber *B* is greater than the auxiliary pressure in chamber *C*. The usual train-pipe pressure is 70 pounds, and, when the auxiliary pressure has reached this amount, the pressures in chambers *B* and *C* are equal, and the auxiliary is said to be fully charged. The lower side of piston *5* is generally referred to as the "train-pipe side," and the upper as the "auxiliary side," or the "slide-valve side."

53. Charging Auxiliary Reservoir.—A modern triple valve should charge an auxiliary from zero up to 70 pounds in about 70 seconds, with a constant train-pipe pressure of 70 pounds. With the triple in release position and the auxiliary charged, there will be 70 pounds in the train line, 70 in the auxiliary, and no pressure at all in the brake cylinder, since the slide-valve cavity *g* connects the brake cylinder with the atmosphere, the communication being through the ports and passages *d*, *e*, *f*, *g*, *h*, and *k*.

54. Applying Brakes.—To apply brakes, it is necessary for a train-line reduction to be made. This may be made (1) in the usual way by the engineer, (2) by the use of the conductor's valve, or (3) by a break-in-two, a burst hose, or a heavy leak in the train line.

If the engineer makes a reduction of 5 pounds in the train line, only 65 pounds will remain in chamber *B*, whereas at the beginning of the reduction, there will be 70 pounds in chamber *C*, or the auxiliary side of piston *5*. This greater auxiliary pressure will force piston *5* downwards. While being forced down, it first closes the feed groove *m* and unseats the graduating valve *7*, allowing auxiliary air to enter the slide valve at *w* and pass through to the end of port *z*. The air, however, cannot pass out of port *z* until the slide valve is moved to service position. By the time the graduating valve is unseated and the feed groove *m* closed, the shoulder *14* on the upper end of the piston stem has engaged the slide valve and begun to move it down. As the slide valve moves down, the exhaust cavity *g* is closed to the ports *f*, *e*, and *d* leading to the brake cylinder. When the knob *j* touches the graduating stem *9*, the piston *5* is prevented from making any further downward movement. With the triple piston in this position, the service port *z* of the slide valve is directly in front of port *f*. This position of the valve is called the *service position*, and is shown in Fig. 7 (*c*). The graduating valve being off its seat, there is now an open communication between the auxiliary and the brake cylinder, and air flows from the auxiliary through the ports *w* and *z* in the slide valve, thence through the ports *f*, *e*, *d*, and out at *X* into the brake cylinder, where the pressure will force out the brake piston and set the brakes. Just so long as the auxiliary pressure is greater than that in the train pipe, so long will piston *5* be held down and the graduating valve remain unseated; but the auxiliary pressure gradually expands into the brake cylinder, until the pressure in chamber *B* is sufficiently greater than that in chamber *C* to overcome the small friction of the packing ring *6*, and cause piston *5* to move upwards and seat the graduating valve, thereby closing port *w*. The pressure on the train-pipe side of the piston *5* still slightly exceeds that in the auxiliary, but not to such an extent as to overcome the additional friction encountered in moving the slide valve *3*; the piston therefore stops as soon as the graduating valve has been seated. This is called the *lap position* of the triple valve, in which position all ports are blanked. The

brakes are now partially set; a further train-pipe reduction will be necessary to apply them any harder.

If another 5-pound train-line reduction is made, the greater auxiliary pressure again forces the piston down, but in this case the slide valve was already in service position to begin with, and it is only necessary to move the piston down sufficiently to unseat the graduating valve. This is accomplished by the time the knob *j* touches the graduating stem *9*; and once more, by means of the service part of the slide valve, communication is established between the auxiliary and the brake cylinder. The graduating valve is again seated automatically by the piston *5* when the auxiliary pressure becomes a little less than that in the train pipe.

After the slide valve has once been moved down, it remains in service position until the brakes are released. Each reduction of train-pipe pressure causes the brake to set harder, and these reductions may be continued just as long as the pressure in the auxiliary is greater than that in the brake cylinder. When these pressures become equalized, the brake is fully set, and a further train-pipe reduction would be a waste of air. Ordinarily, a train-pipe reduction of about 20 pounds will cause a full application of the brakes.

55. Releasing Brakes.—To release brakes, the engineer allows the air stored in the main reservoir to feed quickly into the train line. When the pressure on the train-line side of piston *5* is sufficient to overcome auxiliary pressure and the friction of the working parts, the piston is forced upwards to *release position*, carrying the graduating and slide valves with it. In this position, Fig. 7 (*a*), the feed groove *m* is opened, and air from the train line feeds through *m* and *n* to recharge the auxiliary. At the same time, the pressure in the brake cylinder escapes through *X* and ports *d*, *e*, *f*, *g*, *h*, and *k* into the atmosphere.

56. Emergency Application.—To apply brakes in an emergency, it is necessary to make a sudden and heavy train-pipe reduction. This sudden reduction causes piston *5* to move down very quickly and, compressing the graduating spring *10*,

to traverse the full length of chamber *B*. In this position, a direct connection is established between the auxiliary and brake cylinder across the upper end of the slide valve *3*, as shown in Fig. 7 (*d*). Auxiliary air passes direct into ports *f*, *e*, *d* and out into the brake cylinder at *X*, without having first to pass through the service parts of the slide valve. As only the large ports are used in *emergency position*, they allow the pressure in the auxiliary and brake cylinder to equalize more quickly than do the smaller ports used in the service position. With a plain triple, the brake sets *more quickly* in emergency, but *not with greater force.*

To get the full emergency action of the brakes with plain triple valves, it is necessary to make a sudden reduction of about 20 pounds in train-line pressure. After an emergency application, the release of the brakes is accomplished in the same way as after a service application, already described.

THE QUICK-ACTION TRIPLE VALVE.

GENERAL REMARKS.

57. The **quick-action triple valve** is automatic in its action and can be used on a train of which some of the cars are fitted with the plain triple, but it cannot be worked "straight air," as can the plain triple, for when the triple valve is cut out, the communication from the train pipe to the brake cylinder is also cut off.

Fig. 1 shows the arrangement (on a passenger car) of the quick-action triple, auxiliary reservoir, brake cylinder, and connections. A **T** drain cup is inserted in the train line; a branch pipe extending from this **T** piece connects with the triple, as shown.

In this branch pipe is a stop-cock *6*, by means of which the brake on that particular car can be cut out or in, as desired, without interfering with the brakes on the rest of the train. When the handle of this cock stands at right angles, or crosswise, to the branch pipe, the brake on that car is cut in, that is,

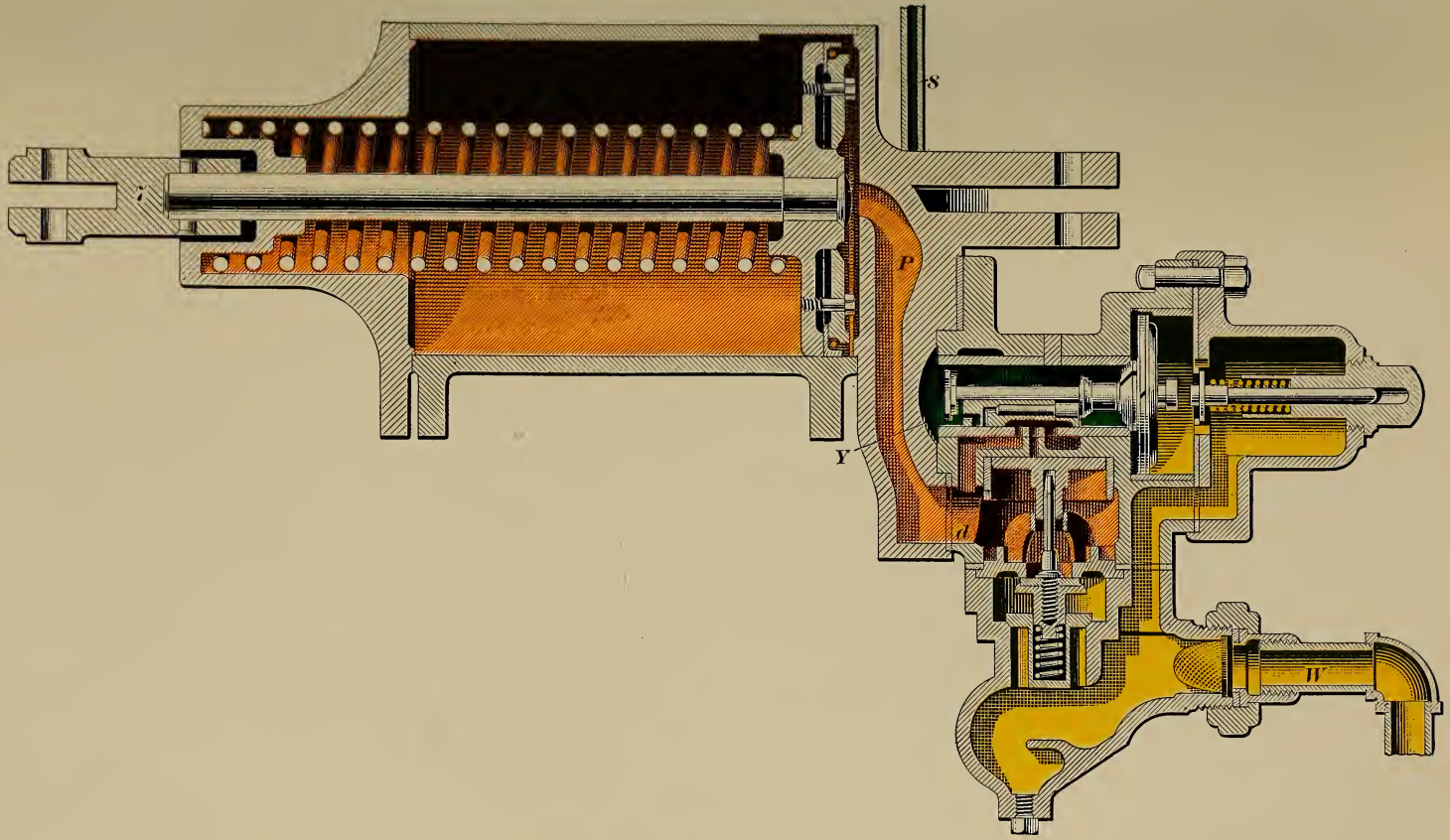

FIG. 8.

it can be operated from the engine in the ordinary manner. When the handle is turned so as to be parallel to, or in line with, the pipe, the brake on that car is cut out, or is inoperative.

Fig. 8 shows the triple connected to the brake cylinder, this illustration being on a larger scale than Fig. 1. The **T** piece just mentioned connects with the triple at *W*. The opening *d* of the triple valve communicates with the passage *P* in the cylinder head, through which passage air is conducted to and from the brake cylinder. The opening *Y* connects with a pipe *8* leading to the auxiliary reservoir, through which pipe the air is conducted between the auxiliary and the triple.

DESCRIPTION.

58. The parts of the quick-action triple as numbered and lettered in Fig. 9 (*a*) are: *1*, the drain cup; *2*, the triple body; *3*, the slide valve; *4*, the slide-valve spring; *5*, the triple piston, and *6*, its packing ring; *7*, the graduating valve; *8*, the emergency-valve piston; *9*, the emergency-valve seat; *10*, the emergency valve, also commonly known as the rubber-seated valve; *11*, the rubber seating; *12*, the check-valve spring; *13*, the check-valve case; *14*, the check-valve case gasket; *15*, the check-valve; *16*, the train-pipe strainer, which keeps foreign substances from entering the triple; *17–18–27*, a union joint; *20*, the graduating-stem nut; *21*, the graduating stem; *22*, the graduating spring; and *23*, a leather gasket. The branch pipe from the train pipe connects at *W*; the pipe to the brake cylinder connects at *X*; the auxiliary-reservoir connection is made at *Y*; *m* and *n* are the feed grooves; and *t* is the port through which auxiliary pressure passes to the space above emergency piston *8* to operate the emergency valve *10*.

59. The quick-action triple contains two distinct sets of mechanism. One of these, consisting of the triple piston *5* with stem, slide valve *3*, and graduating valve *7* with stem *21* and spring *22*, is used in making service stops and in releasing brakes; it is often called the *service part* of the triple. The other set, consisting of the emergency piston *8*, emergency

valve *10*, and train-pipe check-valve *15*, is only brought into use in an emergency application of the brakes; it is hence often called the *emergency* or *quick-action part* of the triple.

SERVICE PART OF TRIPLE.

60. Description.—The description and mode of action of the **service part** of the plain triple applies also to that of the quick-action triple, except in so far as the slide valves *3* differ somewhat in detail. As in the case of the plain triple, the stem of piston *5* engages with slide valve *3*, and also operates the graduating valve *7*. The service ports *w* and *z* in the valve *3* are the same as in the plain triple, but this valve contains, in addition, an emergency port *s*; also, the valve is longer, and one of its edges or corners is cut away, as shown at *q* in Fig. 9 (*b*). This latter view represents the valve as transparent, so as to show the ports better, and it is turned upwards so as to show the exhaust cavity *g* in its face; *w* and *z* are the service ports controlled by the graduating valve *7*; *s* is the emergency port, the end *s'* of which is smaller than port *z*; *q* is generally referred to as the **removed corner** of the valve. Cavity *g*, and ports *w*, *z*, and *s* are shown also in Fig. 9 (*a*). The port *f*, with passages *e e'* and *d*, leads to the brake cylinder; port *t*, as already mentioned, leads to the space above emergency piston *8*; and exhaust ports *h* and *k* lead to the atmosphere. The ports *f*, *t*, *h*, and *k* are also shown in view (*c*), which is a view of the valve seat *24*.

When the slide valve is in emergency position, the removed corner *q* allows auxiliary air to pass down through port *t* and force piston *8* downwards. This unseats emergency valve *10*, and opens communication between the train pipe and the brake cylinder; the check-valve *15* is then raised by train-pipe pressure and allows train-pipe air to pass to the brake cylinder.

61. Rubber-Seated Valve.—The duty of the **emergency**, or **rubber-seated, valve** is to prevent the train-pipe air from passing into the brake cylinder through chamber *I* and port *d*, except when required to do so in emergency applications. Were it not for this valve *10*, the brakes would apply

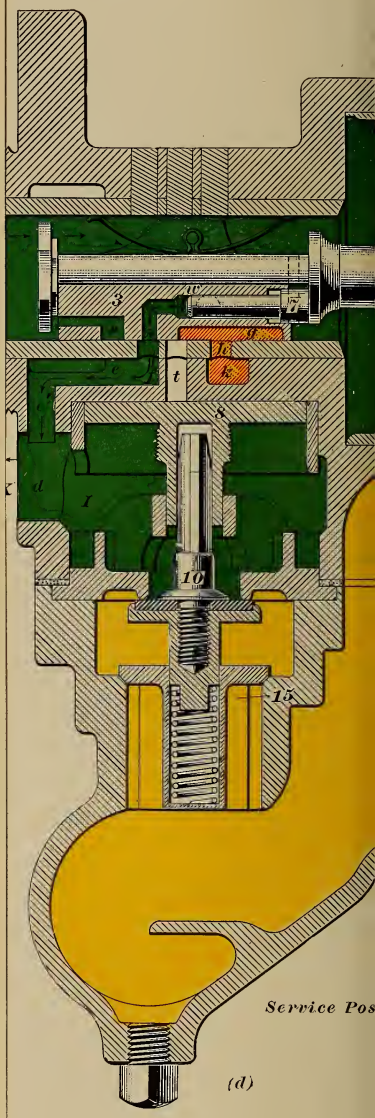

Service Pos

(d)

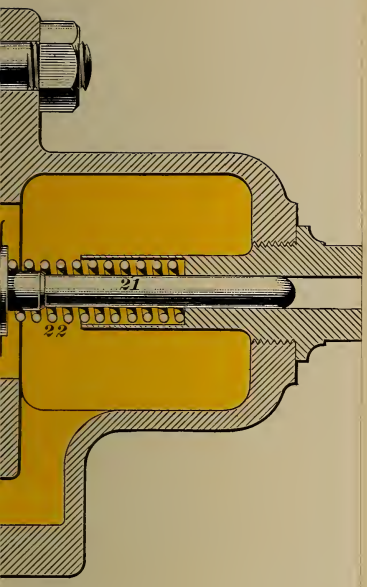
21
22

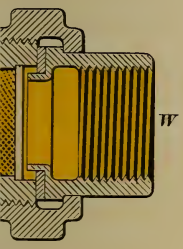
W

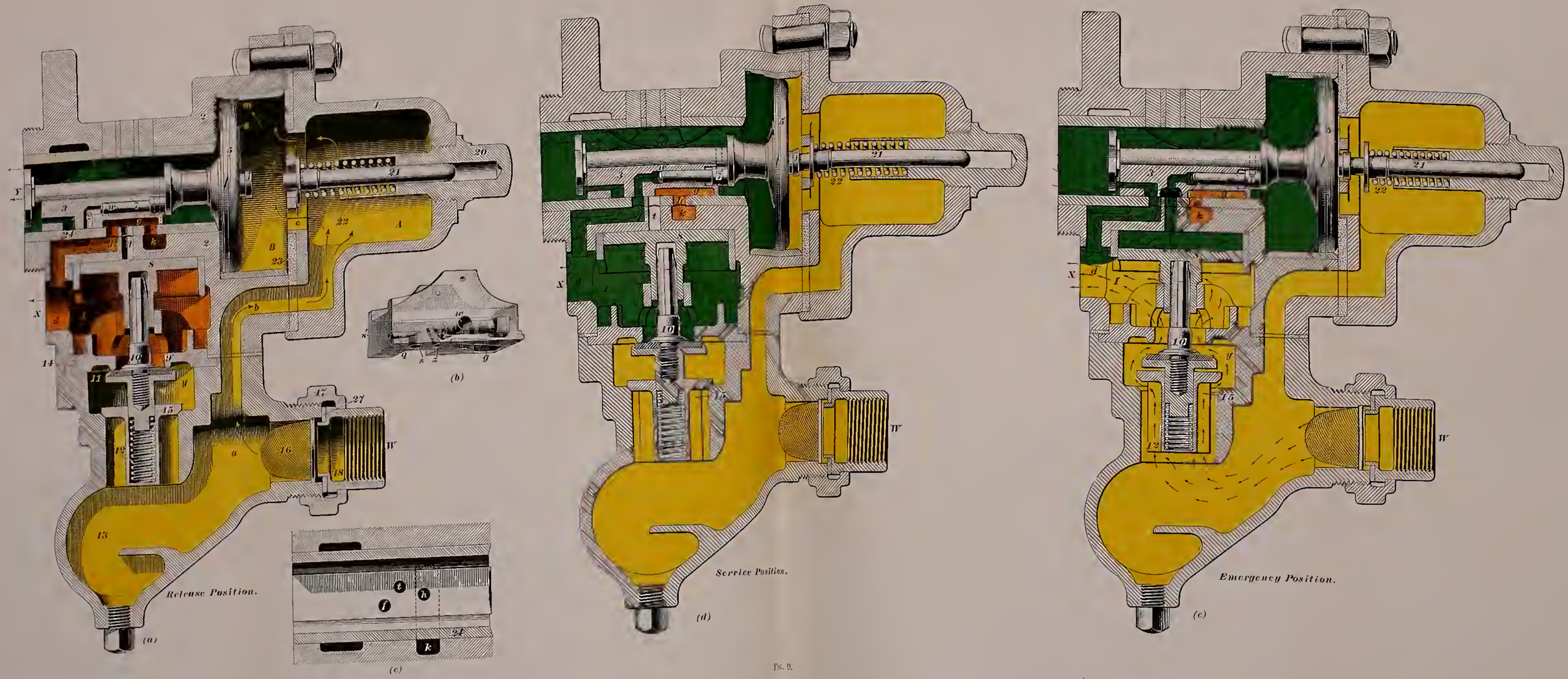
Release Position.
(a)
(b)
(c)
Service Position.
(d)
Emergency Position.
(e)

Fig. 9.

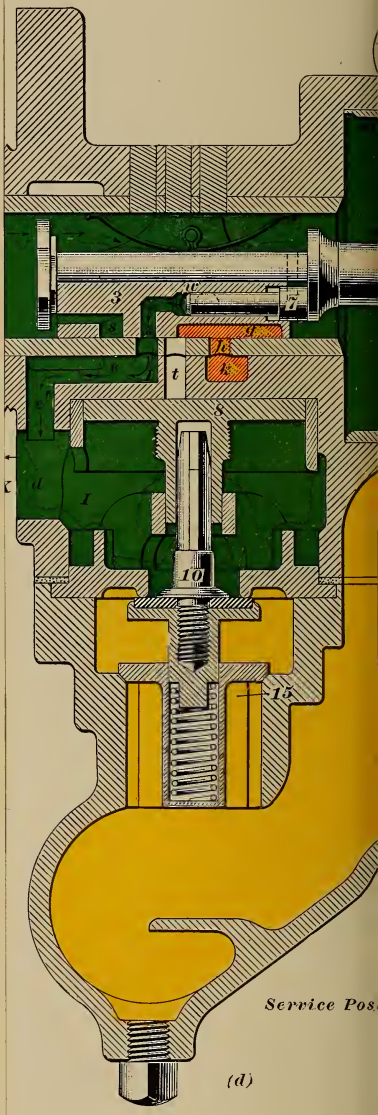
3
t
8
1
10
15
Service Pos
(d)

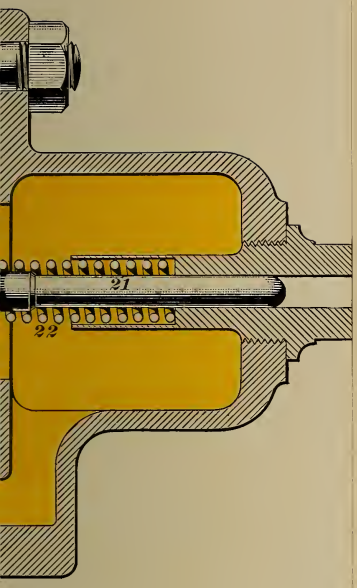
21
22

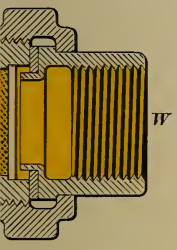
W

as soon as air was turned into the train pipe, and, the triple exhaust port *k* being open, there would be a constant blow through to the atmosphere.

62. Train-Pipe Check.—The **train-pipe check** *15* prevents the brake-cylinder pressure from flowing back into the train pipe, in the event of a hose bursting or the train line breaking, or at any time when the train-pipe pressure is less than the brake-cylinder pressure. If a hose were to burst, all the air would leave the train pipe, and the brakes on the entire train would set in full. If the train-pipe check *15* were not in the triple, there would be nothing to prevent air passing from the cylinder to the train pipe and out to the atmosphere, in case the train parted or a hose burst. This would release that brake.

Spring *12* holds valve *10* to its seat when there is no air pressure present to perform this duty, and, also, when the pressures in chambers *y* and *I* become equalized after an emergency application of the brake. It performs the same duty for train-pipe check *15*.

63. Train-pipe air entering the triple at *W* feeds through the passage *a b* and port *c*, and on through the feed grooves *m* and *n* into chamber *C*, thence through *Y* into the auxiliary. If, when air enters the triple, there is no pressure on top of the train-pipe check *15*, the air underneath will raise it from its seat against the force of the spring *12* and fill chamber *y*, forcing the rubber-seated valve *10* more firmly on its seat. When the pressure in the chamber *y* and the force exerted by the spring *12* are together slightly greater than the train-pipe pressure underneath the check-valve *15*, this valve is forced to its seat and thenceforth plays no further part unless an emergency application is made.

64. Release Position.—The slide valve of the quick-action triple is shown in release position in Fig. 9 (*a*). In this position, any air that may be in the brake cylinder can pass through passages *d* and *e' e*, port *f*, cavity *g* of the slide valve, and the port *h*, out through exhaust port *k* to the atmosphere. Port *k* is also shown in view (*c*), as is also the

port *f* leading through the passage *e e'* to the brake cylinder, and port *t* leading to the top of the emergency piston *8*.

65. Service Position.—When a service application of the brakes is made (by gradually reducing train-pipe pressure), the triple piston *5* moves out until the knob *j* touches the graduating stem *21*, view (*d*), after which any further movement is prevented. The service port *w* and port *z* of the slide valve now connect with the brake cylinder by way of port *f* and passages *e e'* and *d*. As the graduating valve *7* opens before the slide valve moves forward, air now passes from the auxiliary reservoir through ports *w*, *z*, *f*, and passages *e e'*, *d*, to the brake cylinder until auxiliary pressure is reduced just a trifle below train-pipe pressure, when the graduating valve *7* is closed. During succeeding reductions, the graduating valve simply opens and closes without moving the slide valve, as already explained in describing the action of the plain triple.

EMERGENCY PART OF TRIPLE.

66. When, in cases of danger, etc., a sudden reduction of train-pipe pressure is made, what is termed the **emergency part** of the triple valve is called into play; the triple piston *5* moves out quickly, the graduating spring *22* is compressed, and the triple piston travels the full length of chamber *B*. This, the *emergency position* of the triple, is shown in view (*e*). In this position, port *s* in the slide valve connects with port *f* in its seat, and auxiliary pressure can pass through the ports *s*, *f*, and passages *e e'*, *d*, out at *X* into the brake cylinder. The removed corner *q* of the slide valve, view (*b*), has shortly before this reached a position directly above port *t*, view (*e*), thus allowing auxiliary air to pass down through port *t* on to the top of the emergency piston *8*, forcing it downwards. This downward movement unseats the emergency valve *10*, and allows the air in chamber *y* above the emergency check *15* to escape. Train-line pressure beneath this check-valve now forces the latter from its seat, and air from the train pipe passes up by it, on through chamber *y* and the unseated emergency valve *10*, into chamber *I*, and out at *X* to the brake cylinder. The

emergency valve remains unseated until the pressures in chambers *y* and *I* are nearly equalized, when the spring *12* forces the emergency valve and check-valve to their seats.

The position of the removed corner *q* on the slide valve is such that, as the valve moves forward to emergency position, it connects port *t* of the valve seat with auxiliary pressure a short time before port *s* connects with port *f*. The emergency valves therefore open before port *s*, and, consequently, train-pipe air—which passes like a flash through the large openings of the emergency valves—is first to equalize with the brake cylinder, the equalizing pressure being about 20 pounds when check-valve *15* closes. As soon as port *s* connects with port *f*, auxiliary pressure discharges into, and equalizes with, the brake cylinder; but, since the cylinder already contains about 20 pounds pressure, they equalize at about 60 pounds pressure instead of at 50 pounds, as in a service application.

The emergency port *s* of the slide valve is made smaller at *s'* than the service port *z*, to retard the flow of air somewhat from the auxiliary reservoir to the brake cylinder during an emergency application of the brakes, so as to allow as much air as possible to enter the brake cylinder from the train pipe, and thus increase the final brake-cylinder pressure.

67. Plain and Quick-Action Triples Compared. Comparing the plain and the quick-action triples, it will be seen that they both work exactly the same in a *service application*, but that the quick-action triple sets the brake both quicker and harder in *emergency*. The quick-action triple also sets the brake harder in *emergency* than in *service application*, owing to the emergency valve, piston, and check-valve operating so as to allow train-pipe pressure to enter the brake cylinder and aid the auxiliary pressure in applying the brake.

The plain triple sets the brake quicker in emergency than it did in service, owing to the use of larger ports; but the brake does not set any harder, since it simply has auxiliary pressure to use in applying the brakes in either service or emergency.

When a quick-action triple goes into emergency position, a sudden train-pipe reduction is made near it when the emergency

valve opens. This sudden reduction starts the next quick-action triple, and that starts the next, and so on throughout the train. If from any defect one triple goes into quick action, all will follow.

Ordinarily, a gradual train-pipe reduction of about 20 pounds will cause a plain or a quick-action triple valve to equalize the pressures between the auxiliary and brake cylinders at about 50 pounds. In emergency, with a quick-action triple, the pressures are equalized at about 60 pounds, while with the plain, the same pressure is obtained in the cylinder in emergency as in a full-service application, namely, 50 pounds. With quick-action triples, a sudden train-pipe reduction of 10 or 12 pounds will produce a full emergency action of the brakes; while, with a plain triple, a reduction of about 20 pounds is necessary. The reason for this is that a 12-pound reduction will cause the emergency valves of the first triples to open and produce a further train-pipe reduction. Train-pipe pressure is not affected in this way when a plain triple goes into emergency, and, therefore, while a sudden 12-pound reduction would force the triple to emergency position, it would not stay there, as it would be forced back to *lap* or perhaps to *release*, as soon as auxiliary pressure had reduced the 12 pounds. It is necessary, therefore, to reduce train-pipe pressure below that at which the auxiliary and brake cylinders equalize, to obtain a full emergency application with plain triples.

FREIGHT AND PASSENGER EQUIPMENTS.

68. Equipments Compared.—An illustration of the **freight-car equipment** now used is given in Fig. 10. It consists of auxiliary reservoir *10*, brake cylinder *2*, and triple valve *18*. This equipment has to be made very compact on account of the limited space for it on freight cars; but, while it appears to be different from that used on passenger cars, shown in Fig. 1, yet it is exactly the same in principle and operation.

In the **passenger-car equipment,** Fig. 8, there is a pipe *8* leading from chamber *Y* of the triple valve to the auxiliary

reservoir, whereas, in the case of the freight-car equipment, Fig. 10, the air passing from the train pipe through the triple goes direct to the auxiliary.

In the freight equipment, pipe *b* connects the triple valve *18* with the **brake cylinder,** while in the passenger equipment, the triple is fastened directly to the cylinder. When the brake is released in a freight equipment, air from the brake cylinder flows through pipe *b* and out through the triple exhaust to the atmosphere.

In the passenger equipment (Fig. 8), the piston rod is fastened to the crosshead *7*, and the brake levers, also connected to the crosshead *7*, are controlled by the cylinder piston, the levers being moved every time the piston moves. In a freight equipment (Fig. 10), this is not so, as a push rod, bottoming on the piston, is inserted in the sleeve *3*. The outer end of the push rod (not shown in figure) is connected to the brake levers, and, when the hand-brakes are applied, the push rod may be drawn out without moving the piston. When the air brake is applied, piston *3* is forced out, carrying the push rod with it.

There are practically no points of difference in the freight and passenger equipments other than those already described, and a description of the parts in the one will apply equally to those of the other. The various parts of the triple valve have already been described and the mode of working explained.

69. Description.—The **auxiliary reservoir** *10* (Fig. 10) is a storage reservoir. The air stored there is for use in the cylinder *2*, and its use is confined entirely to the car on which it is placed.

The release valve *17*, or **bleed cock,** as it is sometimes called, is for reducing the auxiliary pressure. If the brake on any particular car should "stick," it can be released by opening the bleed cock of the auxiliary on that car until air begins to exhaust from the triple valve, when the bleed cock should immediately be closed. Bleeding the auxiliary reduces the pressure there below that in the train pipe, which consequently forces the triple piston to *release position* and releases the brake.

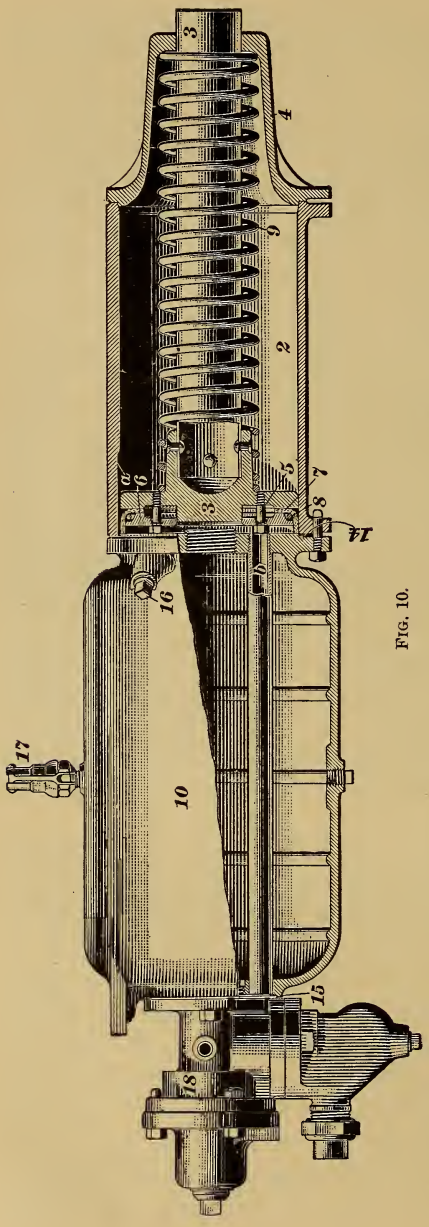

FIG. 10.

The brake cylinder can be oiled by means of the oil plug *16*; there is a similar plug on the other side of the cylinder. Either may be used for the above purpose.

The piston *3* is operated by the air pressure in applying the brakes. In the top of the brake cylinder will be noticed a small groove *a*. This is known as the **leakage groove,** and its purpose is to allow any air that may be in the brake cylinder (either having *leaked* into the brake cylinder, or passed in from the triple valve during a very light application of the brake, as when coupling up hose and making up trains) to pass by piston *3* and out to the atmosphere through the open end of the cylinder. The groove is placed in the top of the cylinder (in which position it is least likely to become clogged with dirt), and is of such a length that the brake piston must move out about 3 inches before the groove is covered. Leakage grooves are now cut in the side of brake

cylinders instead of at the top. Leakage grooves are found in the brake cylinders of freight and passenger cars, and also on most tenders, but not in driver-brake cylinders, until recently. *9* is the release spring; when, in applying the brakes, air enters the cylinder and forces piston *3* out, the release spring is compressed; in releasing the brake, air leaves the cylinder and the release spring forces piston *3* back to *release position*, as shown in Fig. 10. *4* is the front cylinder head; it acts as a guide for the sleeve *3*.

The cup leather packing *7* is to keep the air that enters the cylinder from passing by the piston; it takes the place of the ordinary iron packing rings used in steam cylinders. *6* is the follower plate, which holds the leather packing in place. *8* is the expander ring, which forces out the leather against the walls of the brake cylinder, and so prevents air from passing the piston. As the air enters the cylinder, it strikes the flanges of the leather, forcing them against the walls of the cylinder, and forming an air-tight joint.

TRAIN-PIPE COUPLINGS.

70. In Fig. 11 (*a*) is shown an **air-brake hose** *H* with the nipple *N* and coupling *C* attached; they are fastened to the hose by means of the clamps *c*, *c*. (*b*) is an enlarged view of the coupling *C* shown in (*a*); this is a device for coupling together the hose on two adjacent cars. (*d*) is an angle cock, one of which is attached to each end of the train pipe on each car, as seen in Fig. 1. Connection is made between hose and angle cock by means of the *hose nipple N*, shown in (*a*), which is screwed into the angle cock at *1*, the end *6* of the cock itself being screwed on to the train pipe. *2* is a plug valve operated by the handle *4*. *3* is the liner, or bushing, in which the plug *2* works; it constitutes the valve body. As the valve now stands, air can pass through it. To stop the flow of air, the handle must be placed at right angles to the position here shown. The spring *5* holds the plug tight to its seat. In views (*a*) and

(*b*), *2* is a rubber gasket, by means of which a tight joint is made when the couplings are united between two cars. (*c*) is called a **coupling hook.** The coupling *C* when not in use

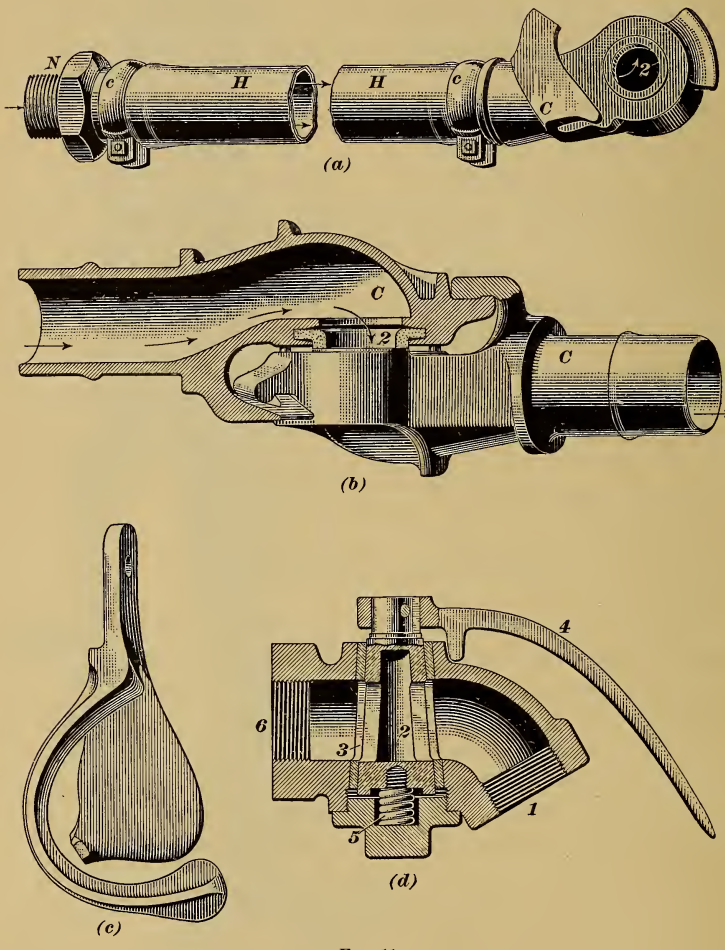

FIG. 11.

is hung in the coupling hook, instead of allowing the hose to hang down and collect dirt, snow, and cinders, which would gradually work into the triples and impair their action.

RETAINING VALVE.

71. Its Duty.—The **retaining valve,** shown in Fig. 12, is used on freight cars in all sections of the country, and on passenger cars, engines, and tenders in mountainous districts.

It is located at the end of the car, in such a position as to be within easy reach of the trainmen when the train is in motion, and is connected by a pipe at *X* with the exhaust port of the triple valve.

Its purpose is to retain a pressure of 15 pounds in the brake cylinder, in order to have sufficient braking power to keep the

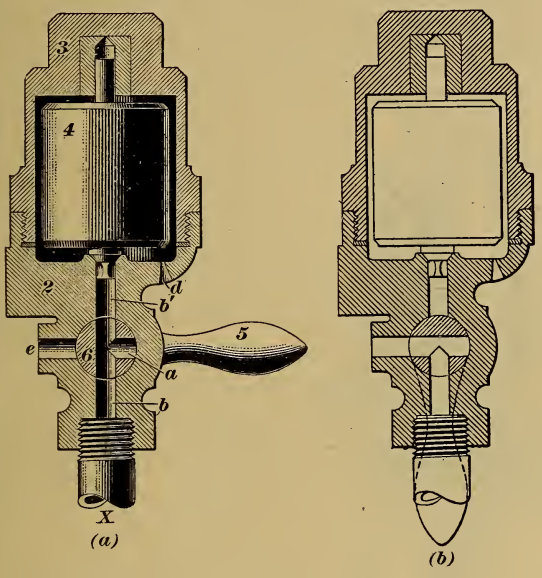

FIG. 12.

speed of a train from increasing too rapidly while the engineer is recharging the train after a release on a grade, preparatory to another application of the brakes.

The retainer cap *3* acts as a guide, and keeps the weighted valve *4* from falling out. It also retards the flow of air from the brake cylinder by forcing it to pass out of the small opening at *d*. The valve *4* is of such a weight that it requires a pressure of

15 pounds per square inch in port b' in order to raise it. The body of the retaining valve is shown at *2*; *6* is a plug valve operated by the handle *5*.

72. Operation.—When the retaining valve is cut out, the handle *5* points straight downwards, as in view (*b*). If the triples are released with the handle *5* in that position, air from the brake cylinder will pass through the exhaust port of the triple, through the pipe connecting the triple valve with the retainer at *X*, and on through ports *b*, *a*, and *e* to the atmosphere. If, when the brakes are released, the handle *5* is in the position shown in view (*a*), the air coming from the brake cylinder and entering the retainer at *X* will pass through ports *b* and b' and so come in contact with the weighted valve *4*. Any pressure above 15 pounds per square inch will raise valve *4* and pass out to the atmosphere through port *d*. When the brake-cylinder pressure is reduced to 15 pounds, valve *4* reseats itself and holds the remaining pressure in the cylinder. The diameter of port *d* at the smallest part is $\frac{1}{16}$ inch. This port is made small so as to further retard the passage of air from the brake cylinder to the atmosphere. The consequence of this is that pressure accumulates in the cap *3*, which acts in concert with the weight of valve *4* to close the valve for a few seconds at frequent intervals until the pressure is reduced to 15 pounds; consequently, the brake-cylinder pressure reduces rather slowly. It takes about 20 seconds for a brake-cylinder pressure of 50 pounds, with average

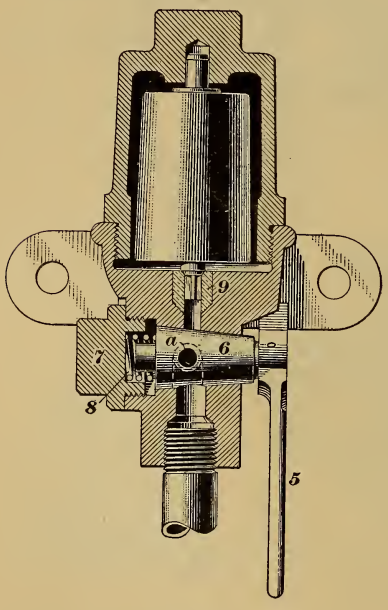

FIG. 13.

piston travel, to reduce through the retainer to 15 pounds, using a modern retainer with the small port *d*.

In an earlier form of retaining valve, there were two ¼-inch holes located similarly to port *d*. These large ports allowed the brake-cylinder pressure to reduce so rapidly that the valve was not sufficiently effective on heavy grades.

Fig. 13 shows the improved retaining valve, which differs from that shown in Fig. 12 in that its plug cock *6* is held always on its seat by the spring *8*. Also, the weighted valve seats on a bushing *9*; *7* is the cap for the cock *6*; the arrangement of ports in the cock is the same as in Fig. 12. The view of this valve is as seen from the front when on the car, whereas Fig. 12 is a side view. The action of this valve is the same as the other; when the handle *5* is turned down, as in the figure, the valve is cut out; when it stands out straight (i. e. horizontally), it is cut in, and will retain 15 pounds in the brake cylinder. The port *d* is in this valve also, but is not shown in this view, owing to the manner in which the section has been taken.

The retaining valve has nothing to do with applying the brakes; it simply retains a certain amount of pressure in the brake cylinder when the triple valve goes to release position.

ENGINEER'S D-8 BRAKE VALVE.

73. The **engineer's brake valve** is that part of the air-brake equipment by means of which the engineer can control the action of the brakes. The two kinds of brake valves now in use are the D-8 and the D-5, E-6, or F-6, the latter three terms denoting one and the same valve, the letter and number being changed as each new catalogue is issued. The D-8 is gradually being supplanted by the F-6, but there are still a large number of the former in use.

74. Description.—The **D-8 brake valve** is shown in Fig. 14, views (*a*) and (*b*) being cross-sections, and (*c*) a plan view with the rotary valve and handle removed so as to show the rotary seat. View (*d*) shows the face of the rotary valve and the ports and cavities in it. View (*e*) is a horizontal section

through the excess-pressure valve *21* in view (*b*). In view (*e*) is shown the passage *f'* leading from the feed-port *f* to chamber *r* on one side of the excess-pressure valve, and the passage *xf''*, which leads from the other side of the excess-pressure valve to the direct-application-and-supply port *l*.

Fig. 14 (*a*) and (*b*) and also Fig. 15 show the **rotary valve** *13* in release position, with cavity *b* of the **rotary seat** connecting port *a* of the rotary with cavity *c*, which latter connects with port *l*.

In view (*d*), which shows the face of rotary valve *13*, *q* is a

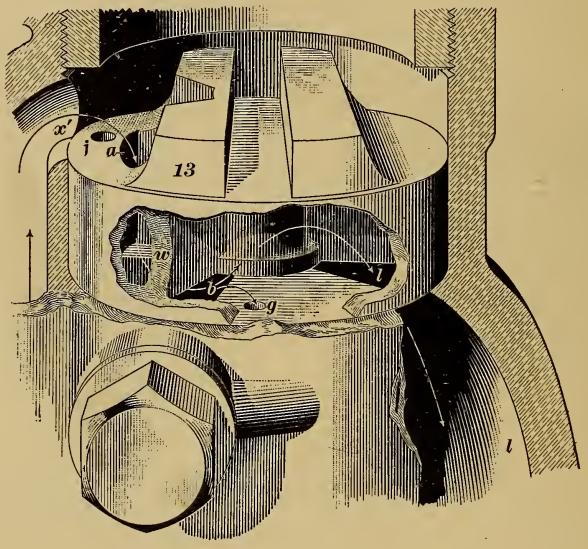

FIG. 15.

pin that fits into a hole in the rotary seat; it acts as a guide for the rotary. The supply port *a* and also port *j* pass entirely through the rotary, while *c* is a cavity in the face of the rotary, but not extending through it; *p* is a small groove in the face of the rotary. When the valve is in *service position*, this groove connects port *e* with port *h*, view (*c*), and thus establishes a connection between the equalizing reservoir and the atmosphere; *w*, in view (*d*), is a bridge separating port *a* from cavity *c*.

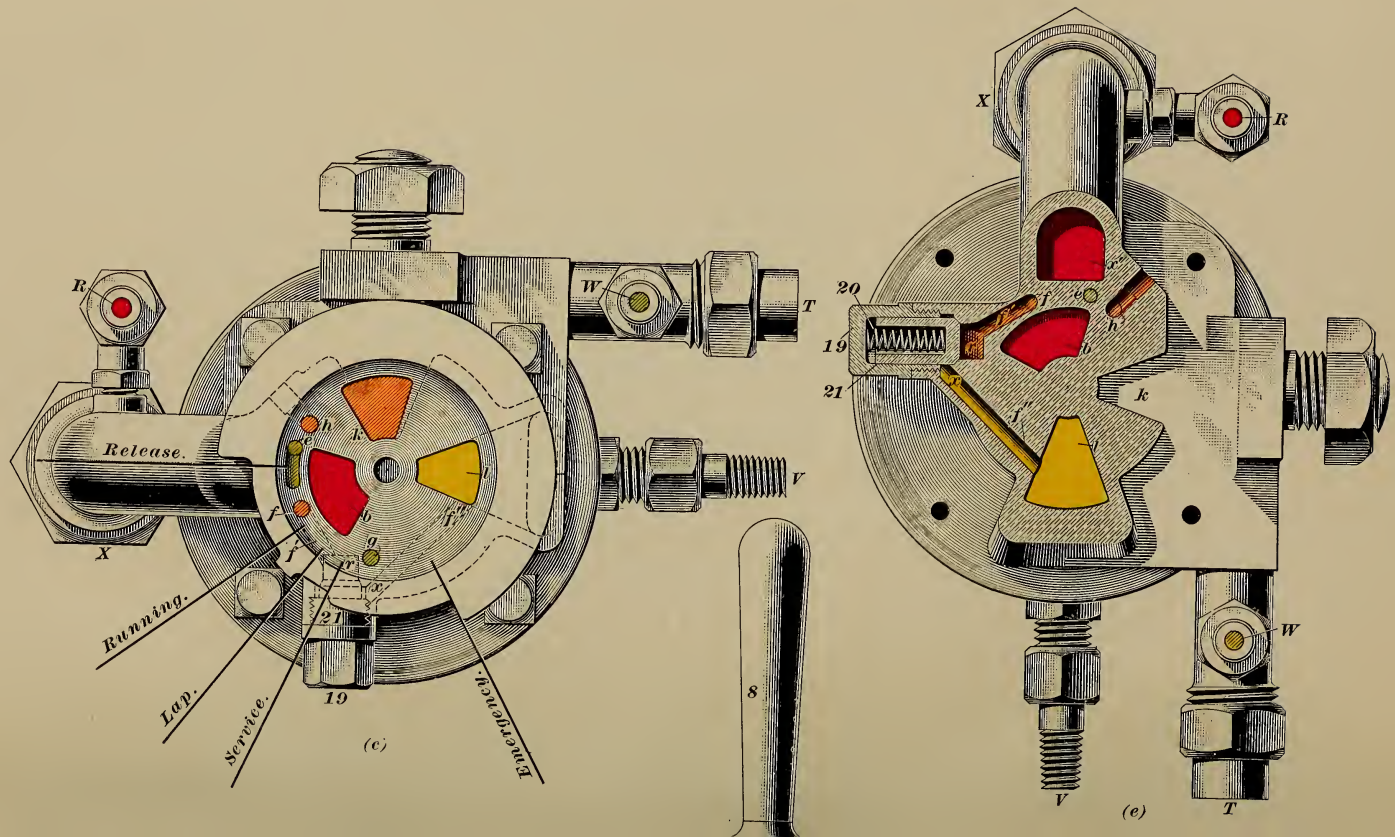
R
W
T
V
X
Release.
Running.
Lap.
Service.
Emergency.
19
21
8
(e)
20
(e)

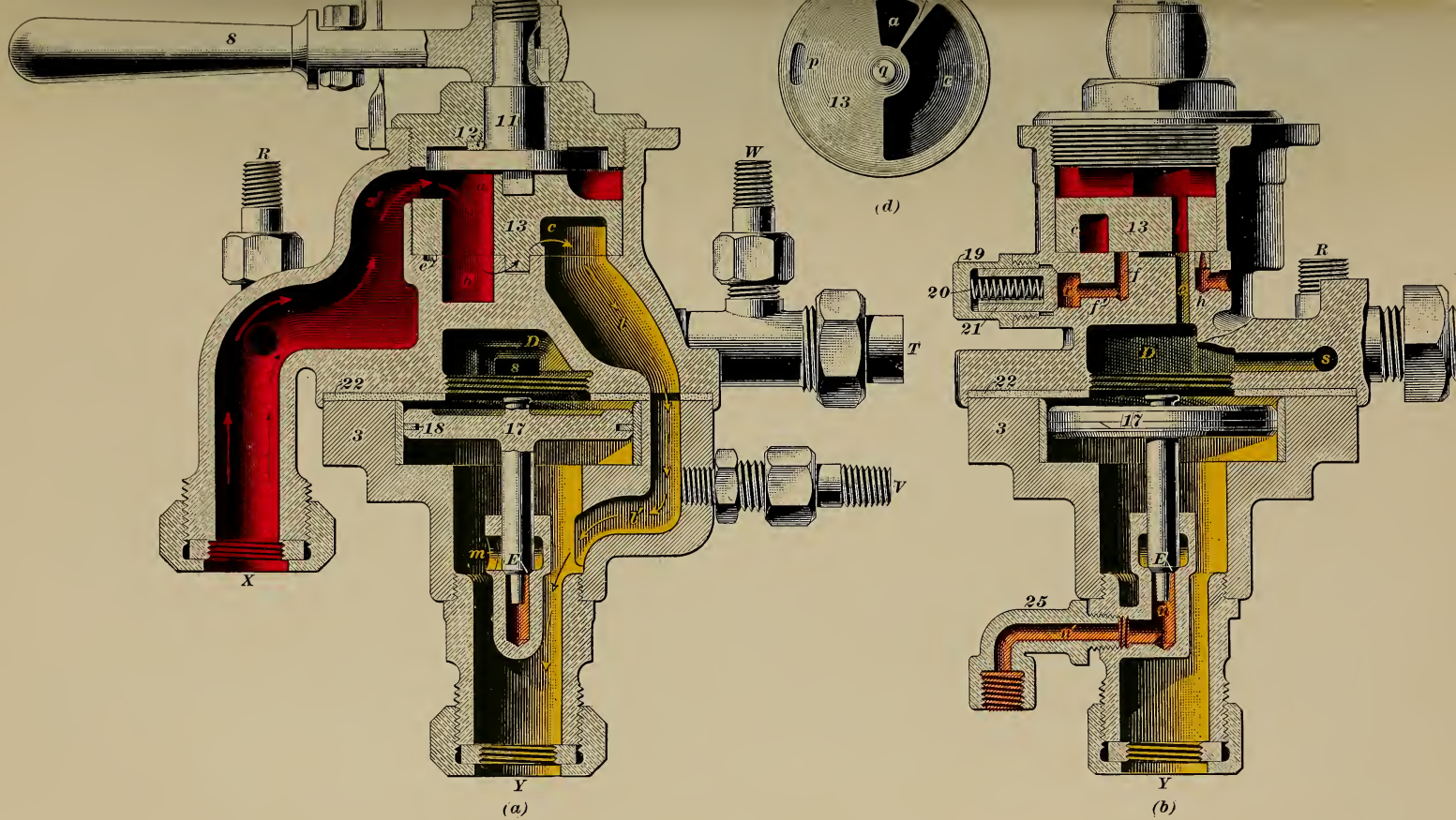

FIG. 14.

The *direct-application-and-supply* port *l* leads to the train pipe through the passage *l'*, as shown in view (*a*), the train pipe being connected at *Y*. The *direct-application-and-exhaust* port *k*, view (*c*), leads direct to the atmosphere.

The *preliminary-exhaust* port *h* leads down and out to the atmosphere, as shown in view (*b*). In this view, also, is seen how the preliminary-exhaust port *e* leads through the rotary-valve seat into chamber *D*, *the cavity or space above the equalizing piston 17* which is connected directly with the equalizing reservoir through port *s* and the pipe connection *T*.

The supply port *b*, views (*a*) and (*c*), is simply a cavity in the rotary seat, and is only used in full-release position to establish communication between port *a* and cavity *c* of the rotary. Fig. 15 shows the rotary valve in release position, with the cavity *b* establishing communication between port *a* and cavity *c*, the passage of the air from port *a* through cavity *b*, into cavity *c*, and from thence to port *l* and the train pipe being indicated by arrows.

The **equalizing port** *g*, Fig. 14 (*c*), leads into chamber *D*. In *running* and *full-release* positions, this port serves to establish a connection between both sides of the equalizing piston *17*, that is, between chamber *D* (or equalizing-reservoir pressure) and train pipe. Pipe connection is made between *z* on the pump governor, Figs. 3 and 4, and *V* in Fig. 14 (*a*) and (*c*); the pump governor, therefore, is operated by train-pipe pressure when used with this valve.

EQUALIZING RESERVOIR.

75. The small **equalizing reservoir** or brake-valve reservoir, sometimes called the little drum, Fig. 1, is generally placed under the cab foot-board. A pipe leads from this small drum to the engineer's valve, where it connects at *T* Fig. 14, and thence through port *s* with chamber *D*. The equalizing reservoir serves to increase the capacity of chamber *D* without enlarging the engineer's valve. Were chamber *D* of small capacity, it would be impossible to make a **gradual** service application of the brakes, for the reason that a gradual reduction of pressure

could not be made in chamber *D*; the least opening from this chamber would cause a great reduction of pressure and consequently would set the brakes harder than desired.

The black gauge hand is connected at *W*, and it therefore indicates chamber *D* and equalizing-reservoir pressure. The red gauge hand is connected at *R* and so indicates main-reservoir pressure, this reservoir being piped to the brake valve at *X*.

The **equalizing piston** *17* separates chamber *D* from the train pipe pressure, chamber *D* pressure always acting to hold it down, and train-pipe pressure to force it up. As long as these two pressures remain equal, the piston remains stationary, but if the equalizing-reservoir pressure is reduced below that in the train pipe, the piston will be raised by train-pipe pressure, which will then escape to the atmosphere through port *m*, train-pipe exhaust valve *E*, and port *n n'*, views (*a*) and (*b*). As soon as the train-pipe pressure under piston *17* is reduced below that in chamber *D*, the piston is forced down by the pressure above it, and closes the train-pipe exhaust valve *E*.

It is essential that a thorough knowledge be acquired of the ports and cavities of the brake valve, and their connections in the different positions of the rotary, in order to obtain a clear conception of the various brake-valve operations.

BRAKE-VALVE POSITIONS.

76. There are five positions in which the brake valve may be used, namely: (1) *release*, (2) *running*, (3) *lap*, (4) *service*, and (5) *emergency*.

Release Position.—This position, Fig. 14 (*a*) and (*b*), is used in releasing the brakes, and in charging the equalizing reservoir, train line, and auxiliary reservoirs.

Running Position.—This is the position used while the brakes are off, as when running along the road. It is also sometimes improperly used in releasing brakes on a very short train.

Lap Position.—In this position, the rotary valve closes and separates all the brake-valve ports. The brake-valve handle is carried on lap position between reductions in a service stop.

Service Position.—This is the one used in making a gradual application of the brakes, such as at stations, water cranes, slow-ups, and the like.

Emergency Position.—This is used when it is desired to stop a train in the shortest possible time, as in cases of imminent danger.

OPERATION OF D-8 BRAKE VALVE.

77. It must be remembered that main-reservoir pressure is always free to enter the brake valve at *X*, and, unless otherwise stated, we shall consider 70 pounds as standard train-pipe, and 90 pounds as standard main-reservoir, pressure.

78. Release Position.—To release brakes, the brake-valve handle is placed in full-release position, namely, that shown in Fig. 14 (*a*) and (*b*). This brings the supply port *a* of the rotary valve *13* in such a position over cavity *b* in its seat that the partition *w* between port *a* and cavity *c* of the rotary is directly over the center of cavity *b* in the seat (see Fig. 15). The supply port *a* is thus directly connected with cavity *c* by means of cavity *b*, and air passes from port *a* into cavity *c* as shown by the arrows in Fig. 15, cavity *c* being then in direct connection with port *l*. A direct connection is thus had with the main-reservoir pressure (which is always on top of the rotary valve) by way of the supply port *a* down into cavity *b* of the rotary seat, up into cavity *c* of the rotary, and then down through the direct-application-and-supply port *l* and the passage *l'*, Fig. 14, into the train pipe at *Y*, raising the pressure in the train pipe and charging the auxiliaries through the triples. At the same time that air is passing through cavity *c* into the train pipe, it also passes into chamber *D* through port *g*, which port is exposed to cavity *c*, and in this way the pressures are kept equal both above and below the equalizing piston *17*.

In full-release position, port *j* is directly over port *e* leading to chamber *D*, and this furnishes another port connection between the main reservoir and this chamber, views (*b*) and (*d*). Thus, when the rotary is in full release, it is seen that there

are two small port connections between the main reservoir and chamber *D*, and one large one between the main reservoir and train pipe.

The pump is stopped by the governor when the train-pipe pressure has reached 70 pounds, so that if the rotary is left in full-release position, 70 pounds is all that will be obtained in the main reservoir, train pipe, and equalizing reservoir, since a direct connection is established between these three places in this position.

The brake-valve handle, therefore, should be moved to running position just before 70 pounds has been reached, in order to have the proper excess pressure.

79. Running Position.—In this position, the partition *w* in the rotary valve has been moved around so as to break the connection between port *a* and cavity *c*. Air may now pass from port *a* into cavity *b*, but cannot get out. In this position, port *j* of the rotary is directly over the feed-port *f*, and port *e* is blanked. With the brake valve in this position, the main-reservoir pressure reaches the train pipe by passing down through port *j* of the rotary into port *f* and passage *f'*, and so on into chamber *r*, where it moves the excess-pressure valve *21* from its seat and passes on through passage *xf''* into port *l* leading to the train line. Cavity *c* still establishes communication between port *l* and equalizing port *g*, so that, as air enters the train pipe, it is also free to pass up into cavity *c* of the rotary and down through port *g* into chamber *D*. A direct connection is thus obtained in running position between the train pipe and chamber *D*, the pressures above and below the equalizing piston *17* are equal, and the black gauge hand, which usually indicates chamber *D* pressure only, now shows train-pipe pressure also, due to the above direct connection.

In running position, air can only pass from the main reservoir by the **excess-pressure valve** *21* into the train pipe when there is 20 pounds more pressure in the main reservoir than there is in the train pipe. This is because the excess-pressure spring *20*, which holds the excess-pressure valve *21* to its seat, has a resistance equivalent to this excess of 20 pounds, which

resistance must be overcome before valve *21* can be raised from its seat. If the pump is started with the brake valve in running position, the red gauge hand will show 20 pounds pressure before the black hand moves at all. The hands will continue to rise 20 pounds apart until 90 pounds is obtained in the main reservoir, and 70 in the train-pipe, when the pump will stop, since the governor is worked by train-pipe pressure and is adjusted to 70 pounds. The difference between the main-reservoir and train-pipe pressures is called the **excess pressure.**

80. Lap Position.—With the valve handle in this position, all ports are closed. Port *j* of the rotary, views (*b*) and (*d*), has been moved around past port *f*, and the rotary now covers port *g*. The main reservoir, chamber *D*, and train pipe are entirely separated from one another, and the black hand now indicates only chamber *D* or equalizing-reservoir pressure, as there is now no port connection between the upper and lower sides of the equalizing piston *17*.

81. Service Position.—When in this position, the valve handle will have been moved so that groove *p* of the rotary *13*, view (*d*), connects the preliminary-exhaust port *e*, views (*b*) and (*c*), with port *h* leading to atmosphere. The engineer leaves the rotary in service position until the black hand shows that the desired reduction of chamber *D* pressure above piston *17* has been made, when the rotary is again moved to lap position. In service position, the only port connection through the rotary is between chamber *D* and the atmosphere, through ports *e*, *p*, and *h*. Chamber *D* pressure, on top of the equalizing piston *17*, now being reduced below train-pipe pressure underneath it, this piston rises, opening the train-pipe exhaust port *E*, and permitting train-pipe air to escape through ports *m* and *n n'* to the atmosphere at the train-pipe exhaust *25*. Train-pipe air continues to escape at the train-pipe exhaust until the pressure below piston *17* is a trifle less than that in chamber *D* above it, at which time the piston is forced down, closing the train-pipe exhaust valve *E*. If the rotary is again placed in service position, the events just described will again occur, the amount of train-pipe reduction

corresponding to the reduction of equalizing-reservoir pressure. When the engineer makes a service application of the brakes, he simply makes a reduction of chamber *D* pressure, and then piston *17* automatically reduces the train-pipe pressure; while piston *17* is reducing the train-pipe pressure, the triple-valve pistons are automatically reducing the pressure in the auxiliaries by allowing it to escape into the brake cylinders.

82. Emergency Position.—In this position, the cavity *c* of the rotary valve is so placed that it connects the direct-application-and-supply port *l*, which leads to the train pipe, with the direct-application-and-exhaust port *k*, leading to the atmosphere. This port *k*, the cavity *c*, and the port *l*, all being large, cause a large opening to be made between the train pipe and atmosphere, and, consequently, a sudden heavy train-pipe reduction is the result. This sudden reduction causes the triples near the engine to assume emergency position. It was seen in the study of the quick-action triple that when one quick-action triple went into emergency position, a sudden reduction of train-pipe pressure near it was made through the quick-action part of the triple; this started the next one, and so on to the end of the train, each triple helping to keep this sudden reduction traveling quickly backwards throughout the train. In the service application of the brake, all train-pipe reductions escape to the atmosphere through the train-pipe exhaust, while in emergency, a sudden reduction is made to start the first quick-action triples into emergency, and these triples make sudden reductions of train-pipe pressure; but, instead of wasting the air by passing it to the atmosphere, they put it into the brake cylinders, where it is used to increase the braking power.

ENGINEER'S D-5, E-6, OR F-6 BRAKE VALVE.

83. The **F-6 brake valve** is illustrated in Fig. 16, wherein (*a*) and (*b*) are cross-sectional views, while (*c*) is a plan view, with the top part of the valve body and the rotary valve *13* removed, so as to show the ports and cavities in the rotary-valve seat *3*. In (*d*) is shown a plan view of the under side,

or face, of the rotary *13*, showing the ports and cavities in it. View (*e*) represents a section of the valve taken through the passage *f' f''*, to show the passages to and from the feed-valve attachment. Comparing Fig. 16 (*d*) with the plan of the D-8 rotary valve shown in Fig. 14 (*d*), it will be seen that cavity *c* is in about the same position in each case, but that the two differ slightly in form.

84. The excess-pressure valve *21*, of the D-8 valve, is replaced in the F-6 valve by the feed-valve attachment *33*, (*b*) and (*c*). The excess-pressure valve in the D-8 maintains a predetermined difference of pressure between the main reservoir and the train pipe; the feed-valve attachment can be regulated to give any desired train-pipe pressure (as high as that in the main reservoir if desired), regardless of what the main-reservoir pressure is. The pump governor used with the F-6 valve controls the pump, and, consequently, the excess pressure.

The air connection *z* of the pump governor (Figs. 3 and 4) is connected by a pipe at *R*, Fig. 16, and the governor, therefore, is operated by main-reservoir pressure.

The equalizing reservoir is connected at *T*, the black gauge hand at *W*, and the red one at *R*. The pipe connections to the train line and the main reservoir are the same in this as in the D-8 valve. The various operating positions of the brake valve handle (*release*, *running*, *lap*, *service*, and *emergency*) are also the same as for the D-8 valve, as shown in Fig. 14 (*c*).

OPERATION OF F-6 BRAKE VALVE.

85. The **feed-valve attachment,** shown in Fig. 16 (*b*), consists of a spring box *69*, within which is contained a regulating spring *68*, which exerts an upward pressure on the feed-valve piston *74* above it, and within the feed-valve body is a supply valve *63*, the lower stem of which is of such a length that it rests on the upper stem of the feed-valve piston. When this piston is up in its normal position, it holds the valve *63* from its seat against the resistance of the spring *64*, which tends to hold the valve down. When the brake valve is in running position,

L. of C.

chamber *u*, above the supply valve *63*, is in connection with main-reservoir pressure through the passage *f'' f'*, port *f* in the rotary seat, and port *j* in the rotary valve. Chamber *B*, just above piston *74*, is in direct communication with the train line at all times through port and passage *i*, and direct-application-and-supply port *l*, view (*e*). Chamber *B* is therefore always filled with train-pipe pressure, which exerts a downward pressure on piston *74*, while chamber *u* is always filled with main-reservoir pressure. The downward pressure of the air in chamber *B* on piston *74* is resisted by the spring *68*, which is adjusted to resist a downward pressure of 70 pounds per square inch. Just so long as the train-pipe pressure in chamber *B* is less than 70 pounds, the spring *68* will hold piston *74* up sufficiently to keep the supply valve *63* unseated, and main-reservoir pressure will flow by valve *63* into chamber *B*, and on into the train pipe, view (*e*). When the pressure in the train pipe and in chamber *B* reaches 70 pounds, the piston *74* is forced down, compressing the spring *68*. As piston *74* descends, the supply valve *63* is forced to its seat by the spring *64*, and no more air can pass from the main reservoir into the train pipe through the feed-valve attachment (or **train-pipe governor,** as it is sometimes called), until a reduction of train-pipe pressure has occurred.

If leaks reduce the train-pipe pressure below 70 pounds, the spring *68* raises piston *74* and supply valve *63*, and allows main-reservoir pressure to restore the loss due to leakage, after which the supply valve *63* is again closed. The tension of the spring *68* is regulated by means of the regulating nut and screw *70*. Screwing up increases the tension of spring, and, consequently, the train-pipe pressure, and unscrewing reduces train-pipe pressure. In view (*b*), the feed-valve attachment is shown in section; a small portion of the body is further broken away so as to show the port *i* by which the air, after passing from *u* through the feed-valve into *B*, makes its way along the passage shown into port *l*; this passage runs along behind the passage *f'' f'*, exactly on the same level with it, so that it cannot be seen in view (*b*); its position, however, is shown in view (*e*).

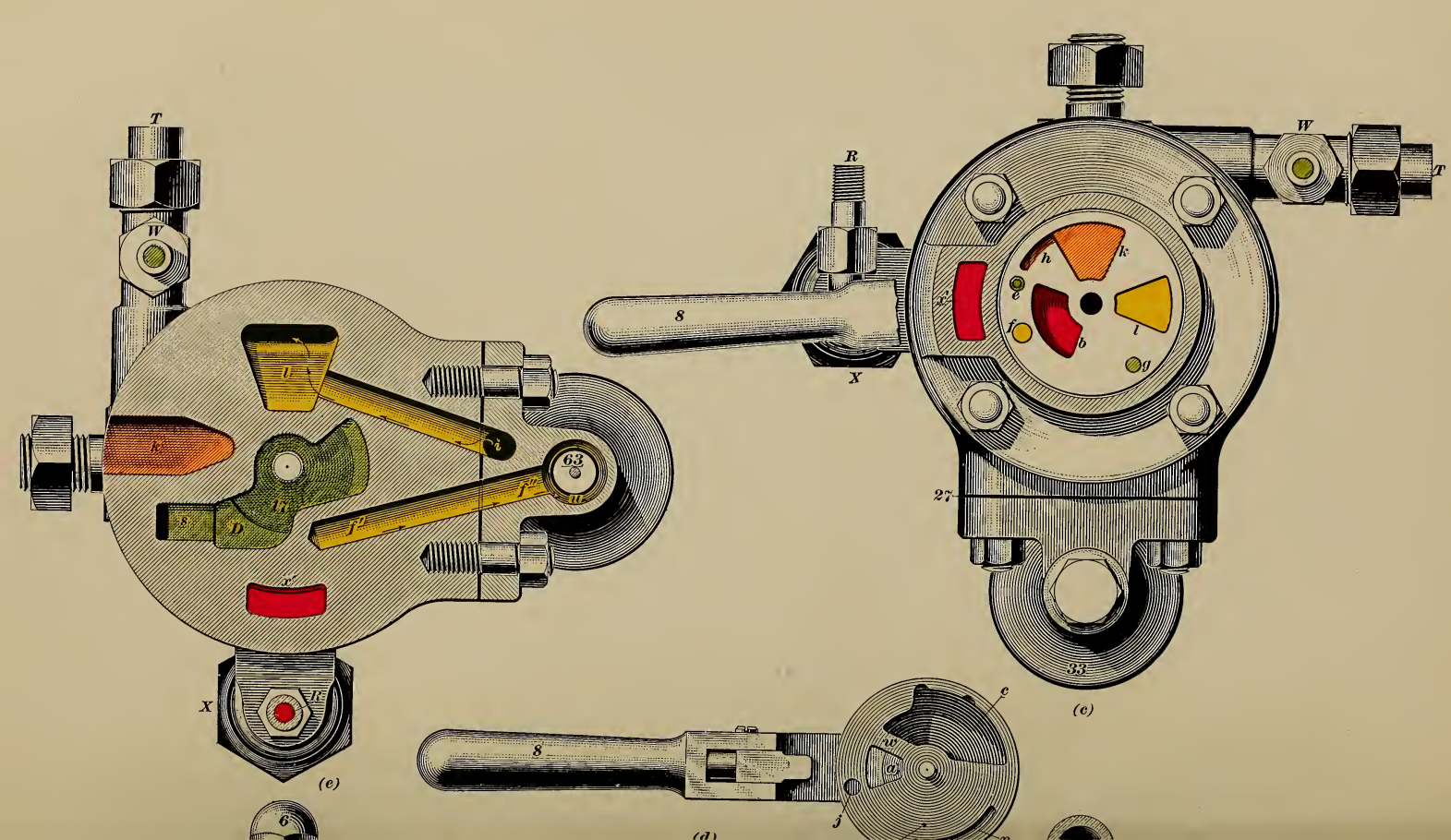
T
W
R
W
T
h
k
e
x'
f
b
l
g
8
X
27
33
(c)
63
x''
X
(e)
8
e
f
g
(d)
6

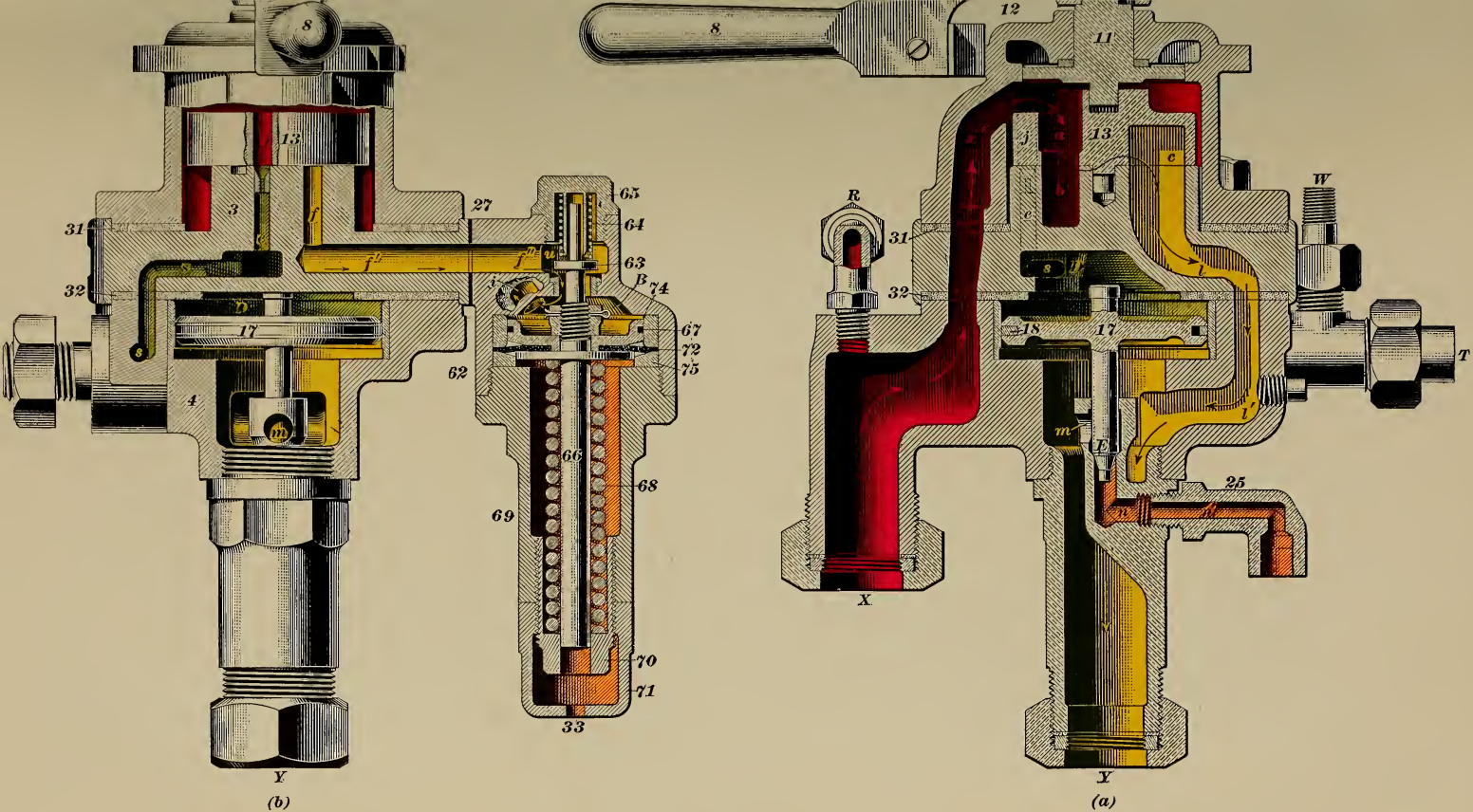

8
13
3
31
32
17
4
m
Y
(b)
27
65
64
63
B
74
67
72
75
62
66
68
69
70
71
33
12
11
13
R
31
32
18
17
W
T
m
E
25
X
Y
(a)

FIG. 16.

86. Release Position.—When the brake valve is in this position, (*a*) and (*b*), the supply port *a* of the rotary stands directly over cavity *b* of the rotary seat, and port *j* of the rotary stands directly over the preliminary-exhaust port *e*, view (*b*). Main-reservoir pressure is free to pass into port *a* of the rotary, and down into cavity *b* of the rotary seat. The bridge *w*, between cavity *c* and port *a* of the rotary, view (*d*), now stands across the middle of cavity *b*, so that the air entering cavity *b* from port *a* passes under this bridge and up into cavity *c*, as shown in Fig. 15. The air passes from cavity *c* into the supply port *l* and out into the train line at *Y*. Train-pipe pressure increasing, the triple pistons are forced to release position and the auxiliaries are charged. While the air is passing through cavity *c* to port *l*, it is free to pass down through the equalizing port *g* into chamber *D*, and thence out to the equalizing reservoir through port *s*. During the time air is feeding into the chamber *D* through port *g*, main-reservoir air is feeding through port *j* of the rotary and the preliminary-exhaust port *e* of its seat into the chamber *D*. In release position, one large port leads from the main reservoir to the train pipe, and two small ports lead to the equalizing reservoir (through chamber *D*). In view (*d*) is seen a very small port *r*, called the engineer's **warning port,** drilled through the rotary valve in such a position that, when the latter is in full release, this warning port is directly over the exhaust port *k* in the rotary seat, view (*c*). Main-reservoir air on top of the rotary blows through this small warning port into the emergency exhaust, and the sound of escaping air is heard by the engineer. This sound is to warn him that he must not leave his valve in full-release position too long, for the following reasons: With this valve, the pump is not stopped until 90 pounds pressure is obtained in the main reservoir, as main-reservoir pressure operates the pump governor, which is adjusted to 90 pounds. Now, there is a direct connection between the main reservoir and train pipe in full-release position, and if the rotary is left there, 90 pounds pressure will be obtained in both the main reservoir and train pipe. This high pressure, getting into the auxiliaries, would be likely to slide wheels when the brakes were applied, and there would

also be a lack of excess pressure for releasing brakes. Besides this, if the valve were now placed in running position, the feed-valve attachment would be held closed until train-pipe pressure was reduced to 70 pounds, and, consequently, train-pipe leaks would tend to cause the brakes to "creep on" until both train-pipe and auxiliary pressures were reduced to 70 pounds, when the feed-valve would begin operating again, and supply the air lost through these leaks.

87. Running Position.—In this position, port *j* of the rotary is in communication with port *f* of the rotary seat, and air from the main reservoir passes down through ports *j*, *f*, through the passage *f' f''*, and on through the feed-valve attachment and into the train pipe by way of passage *i* and port *l*, as explained in the description of the feed-valve attachment. The air continues to flow thus until the train-pipe pressure reaches 70 pounds, when the feed-valve attachment closes. As air passes through the feed-valve attachment through port *i* and on into port *l* and the train pipe, some of it passes up into cavity *c* in the rotary, and down through port *g* into chamber *D*. A connection is thus obtained between the train pipe and chamber *D*, that is, between both sides of the equalizing piston *17*. The black gauge hand is piped to the equalizing-reservoir connection at *T*, and, as there is in running position a port connection between the train pipe and chamber *D*, through the cavity *c* in the rotary and port *g*, the black hand must in this position indicate both chamber *D* and train-pipe pressures. The same movement that changes the rotary *13* from full release to running position, closes the warning port *r* and moves the bridge *w* of the rotary, so that it prevents the passage of air from cavity *b* of the rotary seat into cavity *c* of the rotary. The feed-valve attachment keeps the train-pipe pressure at 70 pounds, and the pump governor stops the pump when main-reservoir pressure has reached 90 pounds, so that, when everything is fully charged and the valve is in running position, the black hand should register 70 pounds and the red hand 90.

88. Lap Position.—In this position, the rotary has been moved around so as to close all connections. Port *j* is closed to port *f*; the equalizing port *g* is covered so that it is shut off from cavity *c*, and connection between the top and bottom of the equalizing piston *17* is cut off.

89. Service Position.—In this position, the rotary has been moved so that groove *p* in the face of the rotary valve, view (*d*), connects the preliminary-exhaust port *e* in the rotary seat with the port *h*, which leads into the direct-application-and-exhaust port *k* (called also the **emergency-exhaust** port). A direct connection is thus established between chamber *D* and the atmosphere, and air from chamber *D* can pass through port *e*, groove *p*, and ports *h* and *k* to the atmosphere. The reduction of the pressure in chamber *D* causes the equalizing piston to rise and open the train-pipe exhaust valve *E*, as already described in the operation of the D-8 valve.

90. Emergency Position.—In this position, the rotary has been moved around so that cavity *c* connects port *l* (leading to the train pipe) with the emergency-exhaust port *k* (leading to the atmosphere). The opening of these large ports causes a sudden train-pipe reduction, which give an emergency application of the brakes, as already described in the case of the D-8 valve.

THE AIR BRAKE.

(PART 2.)

DEFECTS AND THEIR REMEDIES.

THE PUMP GOVERNOR.

1. Its Importance.—The air pump is the life of the air-brake system, since its duty is to supply air, without which the brakes cannot be operated. Anything that renders the pump inoperative, therefore, makes the air-brake system useless.

The pump governor is a throttle valve whose duty is to automatically control the air pump; hence, any disorder in the governor will affect the working of the pump and make the brake system less reliable and effective, or it may render the system entirely useless until cut out.

IMPROVED GOVERNOR.

2. Causes of Failure to Operate.—If the governor does not operate the pump properly, and cannot be made to do so by adjusting the tension of the spring *41*, the trouble may be due to any of the following causes: (1) Leaky pin valve; (2) steam valve held open by solid matter on its seat; (3) relief port stopped up; (4) drip pipe frozen or stopped up; (5) pin valve held on its seat by the spring box; and (6) governor piston stuck in bushing.

1. *Leaky Pin Valve.*—This may be due to the pin valve *b*, Fig. 3,* not seating properly; or to solid matter, such as dirt,

* All figure numbers used in this Section refer to the illustrations in *The Air Brake*, Part 1.

gum, or scale, holding the valve from its seat. A leaky pin valve allows air at main-reservoir pressure (or train-pipe, as the case may be) to pass from chamber *a* past valve *b* and through passage *d* into chamber *e* above the governor piston *28*. If the air leaks past the valve faster than it can escape through the relief port *c*, pressure will accumulate in chamber *e* and force the governor piston downwards, so as to wholly or partially close the steam valve *26*. If the steam valve is closed, the pump will, of course, stop; if only partially closed, the steam supply will be throttled and the pump will work more slowly than usual. A slight leak past the pin valve will simply make the governor less prompt in starting the pump after the pin valve closes, and it will be indicated by a constant discharge of air from the relief port *c*.

The pin valve may be removed for cleaning by unscrewing the spring box from the diaphragm body.

2. *Steam Valve Held Open.*—If the steam valve *26* is held from its seat by dirt or solid matter, the pump will continue to work until sufficient pressure is accumulated in the main reservoir to stop it. In this case, although the pin valve *b* may work properly, and open when a main-reservoir pressure of 90 pounds is obtained, yet the dirt on the seat of the steam valve will prevent the steam valve from closing, and the pump, consequently, will continue to work, although at a slower speed than usual. A *leaky steam valve*, also, will keep the pump moving slowly.

3. *Relief Port Stopped Up.*—It will be remembered that the duty of the relief port *c* is to allow the air to escape from chamber *e* when the pin valve *b* closes, so that the pump will start promptly. If port *c* is stopped up, this means of escape is cut off, and the air will have to leak past the packing ring *29* and out of the drip pipe. The rapidity with which it will do this depends on the fit of the packing ring; if this fit is at all snug, the governor steam valve *26* may not open until some little time after the pin valve closes. In this case, therefore, it is possible for leaks to reduce main-reservoir pressure several pounds before the pump begins to work again.

4. *Drip Pipe Stopped Up.*—If the drip pipe is frozen or stopped up and the stem of the steam valve *26* is worn, steam will feed up into the chamber under the governor piston and prevent the piston from being forced downwards to close the steam valve *26*. The pump, therefore, will continue to work until sufficient pressure is accumulated to stop it. A worn steam-valve stem will be indicated by steam escaping from the drip pipe—if the latter is not stopped up. Even though the stem does not leak sufficiently to prevent the steam valve from being closed, the pump will continue to work, for air will leak down past the piston packing-ring as soon as the pin valve opens, and accumulate under the piston. This soon raises the piston, and thus opens the steam valve. The pump then starts, and continues to work until stopped by the pressure in the main reservoir.

5. *Pin Valve Held on Its Seat by Spring Box.*—If the pin valve is too long, or the edge of the diaphragm body so reduced that the pin valve is held on its seat when the spring box is screwed down tight, the governor will not work at all. To test for this defect, slack off on the spring box and see if the governor will then operate.

6. *Governor Piston Stuck in Bushing.*—If the bushing in which the governor piston works becomes badly worn, the piston is liable to stick at the lower end of its stroke, and the pump will not start. A light tap on the governor or on the steam pipe near it is usually sufficient, however, to start it operating again.

OLD-STYLE GOVERNOR.

3. Defects of This Governor.—All that has been said about the causes of trouble with the improved governor is equally applicable to the old-style governor, with the exception of that part which refers to the relief port *c* of the former kind.

Besides the sources of trouble already enumerated, the old-style governor has another one: The diaphragm *19*, Fig. 4, is not sufficiently supported, and, as a consequence, main-reservoir

pressure sometimes raises the diaphragm until it "buckles." When this occurs, the regulating spring *18* seems to lose all control of the diaphragm, and the pin valve *17* is liable to open and stop the pump at almost any pressure—sometimes stopping it before standard pressure is obtained, and at other times not until standard pressure has been exceeded. A governor in this condition is worse than useless, and should be cut out of service until a new diaphragm can be substituted. In fact, whenever the governor becomes disabled, and, for any reason, cannot be repaired on the road, it should be cut out of service, and the pump operated by hand—by means of the pump throttle.

CUTTING OUT A GOVERNOR.

4. In case a governor becomes disabled, it may be cut out by placing a blind gasket in the air pipe leading to it, as, for instance, in the union at *z*, or by plugging the small opening that leads into chamber *a*. In either case, pressure will be excluded from chamber *a*, and, consequently, the steam valve will remain open, thus providing for the steam a free passage through the governor.

PUMPS.

PACKING THE PUMP.

5. The **life and efficiency** of an air-brake pump depend, to a great extent, on the care it receives. In packing such a pump, any substance that will harden, such as asbestos, should not be used. Also, care should be exercised not to screw the packing gland nuts too tight, as the rubbing friction between the piston rod and packing, when the latter is pressed too hard against the former, may produce sufficient heat to burn the packing out, and cause unnecessary trouble on the road. If the gland nuts can be screwed up sufficiently by hand to prevent a blow, no wrench should be used. A blow should be stopped as soon after it occurs as possible, as the steam, in

escaping, tends to cut a channel through the packing along the piston rod, and thus spoil it.

A **swab** saturated with oil should always be used on the piston rod. This not only serves to keep the rod and packing, but also the air cylinder, in good condition, as some of its oil works down into the latter and helps to lubricate it.

OILING THE PUMP.

6. Steam Cylinder.—A sufficient quantity of good oil should be used in the steam cylinder to keep the parts well lubricated and prevent groaning. The **quantity** of oil necessary will depend on the kind of oil used, and also on the pump itself, as some pumps require more than others. If the pump groans constantly, and the pump exhaust or the drip pipes show that considerable water is working through the steam cylinder, its dry pipes should be examined for leaks that might allow water to reach the pump and wash out the oil.

7. Air Cylinder.—The **quantity** of oil to be used in the air cylinder depends to a great extent on the pump, but in any case it should be used very sparingly. The amount should only be sufficient to keep the packing rings free, and prevent the cylinder walls from cutting. If too much is used, a gummy deposit is formed in the air cylinder and air passages, and on the air valves, which tends to cause heating; also, oil works back into the brake valve and triples, and causes them to work poorly; 32° West Virginia well oil is considered best for use in the air cylinder. The oil may be fed to the cylinder by means of a swab on the piston rod, or through the air-cylinder oil cups, *but it should never be fed through the air inlets*, as it will close the air passages, gum up the valves, reduce their lift, and sooner or later result in overheating. Animal or vegetable oils should not be used in the air cylinder, as they "gum" very readily; also, mineral oils that have a low flashing point, as, for instance, kerosene, should not be used in a hot cylinder, as they generate an explosive gas that ignites at a comparatively low temperature, and may, therefore, cause trouble.

CLEANING OUT THE PUMP.

8. Occasionally, the air cylinder of an air pump gets a fit of "groaning." When this occurs, the lower air-cylinder head should be removed, the piston pushed up to the top end of the cylinder, and the cylinder thoroughly cleaned by means of a piece of waste saturated with kerosene. The cylinder should then be wiped out thoroughly with clean waste, and oiled lightly with a good grade of mineral oil or vaseline, after which the head may be replaced.

If the air passages of a pump become **gummed up,** they may be cleaned out by working a potash solution through the air cylinder. To do this, disconnect the air-discharge pipe at the main reservoir, and make provision for catching the solution as it is discharged through this outlet. Run the pump very slowly, and allow the potash to be drawn in through the air-inlet ports, and thus worked through the pump. Pass the same solution through four or five times, or until the passages are clean. Sufficient clean hot water must then be worked through the pump to thoroughly cleanse it of all potash, since, if any is allowed to remain, it will gradually work back into the brake system, destroy the gaskets, and work mischief in general. If a potash solution cannot be had, use hot soapy water, or even clear hot water alone.

RUNNING THE PUMP.

9. Starting.—When **first starting** the pump, the drain cocks *41*, Fig. 5; or *105* and *106*, Fig. 6, should be opened, and left so until the pump is thoroughly warm; it should be started slowly to allow the water of condensation to escape gradually, and to prevent pounding. No provision is made in the steam end of an air pump for bringing the piston to rest easily by means of cushioning, since, when the pump is working against pressure, the air in the air cylinder acts as a cushion. When the pump is first started, however, there is little or no pressure in the main reservoir, and, consequently, there is nothing to prevent the pistons from striking the cylinder heads

violently if the pump throttle is opened very wide. For this reason, the pump should be run slowly until sufficient pressure is accumulated to cushion the pistons—about 25 or 30 pounds.

After the pump is warm, the drain cocks should be closed, and the throttle may be opened wide enough to run the pump at the required speed. The air-pump lubricator should be turned on as soon as the pump is started, since, by oiling the cylinder well at the start, less oil will be necessary afterwards to keep it working smoothly. If a pump groans badly in the top end, the reversing piston probably needs oil; in this case, close the pump throttle, remove the reversing-chamber cap, and pour in a small quantity of good valve oil.

10. Speed of Pump.—To obtain the best results from a pump, it should not be run at a slower speed than from 45 to 60 strokes a minute. The speed may be increased as occasion demands, but "racing" should be avoided, as it causes overheating.

If a pump is run **too slowly,** some of the air, being compressed, will pass by the packing rings, and expand and fill the other end of the cylinder, and thus less fresh air will be drawn in through the suction valve at each stroke; in consequence of this, the pump heats up and its efficiency is greatly reduced. When the pump is run at its proper speed, however, the air has less time in which to pass by the piston packing-rings; consequently, the pump heats less and its efficiency is greater.

LIFT OF AIR VALVES.

11. The **lift** of the receiving air-valves in the 8-inch pump should be $\frac{1}{8}$ inch, and that of the discharge valves, $\frac{3}{32}$ inch. The lift of both the receiving and the discharge valves of the $9\frac{1}{2}$-inch pump should be $\frac{3}{32}$ inch. All the air valves in the $9\frac{1}{2}$-inch pump are of the same size; in the 8-inch pump, the receiving valves are smaller than the discharge valves, and, hence, must have a higher lift to accommodate the passage of the air.

WORKING TEMPERATURE OF PUMP.

12. Conditions Affecting the Temperature. — The **normal temperature** of a pump depends on: (1) the quantity of air it compresses; (2) the rate at which the air is compressed; (3) the pressure against which the pump works; and (4) the temperature of the air before compression.

1. *Quantity of Air Compressed.*—The greater the quantity of air compressed in a given time, the more continuously, or else the faster, the pump will have to work in order to compress it; hence, the greater the normal temperature of the pump.

2. *Rate of Compression.*—Experiment shows that the faster the air is compressed, the higher will be its final temperature; also, the faster the pump is run, the less time there is for the radiation of heat between strokes. Hence, since more heat is generated, and less heat radiated at each stroke of the pump, it is evident that the temperature of the pump must increase with its speed.

3. *Resisting Pressure.*—More power is employed when working against a higher than when working against a lower pressure; therefore, heat is generated at a greater rate. Also, experiment shows that the final temperature of air under compression increases with the pressure.

4. *Temperature of Air Before Compression.* — Experiment shows that air at 0° F. will have a final temperature of about 360° F. when compressed to 90 pounds pressure, while air at 100° F. will have a temperature of about 530° F., the speed of the compressor being the same in both cases.

EXCESSIVE HEATING OF PUMP.

13. Causes of Overheating.—The **overheating** of a pump may be due to one of the following causes: (1) Continuous high speed; (2) excessive pressure to work against; (3) air-piston rings badly worn; (4) air cylinder leaking; (5) main reservoir leaking back into air cylinder; (6) air passages in pump or air-discharge pipe partially stopped up; (7) air valves stuck shut; or (8) too small a main reservoir.

1, 2. *Continuous High Speed, or Excessive Pressure.*—It has already been shown (see preceding article) how either of these causes will result in excessive heating.

3. *Leaky Piston Packing-Rings.*—This defect will cause a pump to overheat more quickly and to a higher degree than any of the other causes; consequently, the air-piston packing rings should receive frequent attention.

When the packing rings are badly worn, air can pass by them in either direction; consequently, less air is taken into the cylinder and less forced into the main reservoir at each stroke than if the rings were tight. As the piston moves forwards, it compresses, and, therefore, raises the temperature of the air in front of it; some of this air then escapes past the piston, and raises the temperature of the incoming air considerably, *before it is compressed.* This results in a still higher final temperature of the air when compressed, and that portion which in its turn escapes past the piston is at a higher temperature, and, hence, heats the incoming air to a higher degree than in the previous stroke. At each stroke of the piston, the air that leaks by is hotter than in the previous stroke, and raises the temperature of the incoming air still more, until, finally, the pump is badly overheated.

There is also another effect due to leaky packing rings: Since the pump neither takes in nor discharges as much air as it would if in normal condition, it follows that a greater number of strokes will have to be made to pump up main-reservoir pressure; consequently, the pump will have to work faster or for a longer time than usual, either of which contingencies will help to overheat it.

To test for worn piston packing-rings run the pump at a speed of about 45 strokes per minute, and place the hand over the air-inlet ports. If on both the up and down strokes of the pump, air is drawn in during the first part of the stroke only, the suction ceasing during the latter part, it indicates that the packing rings need renewing. The reason why the suction ceases before the end of the stroke is as follows: As the piston moves forwards at the beginning of its stroke, a vacuum is created, and air is drawn into the cylinder behind it, but, as the piston

continues to advance, the air in front is gradually compressed until, finally, it is forced past the packing rings in sufficient quantities to destroy the vacuum and thus the suction.

4. *Leakage From the Air Cylinder.*—Any such leakage, either through a leaky or broken receiving valve, or a blow in the piston-rod packing, reduces the amount of air pumped per stroke, and the pump must either be run faster or for a longer time to compress a given amount.

A *leaky receiving valve* is indicated by air blowing back through the valve as the piston moves towards it. Also, it causes the piston to take a quicker stroke when traveling in that direction. *To test* for a leaky receiving valve in an 8-inch pump, hold the hand over the air-inlet ports; air will be forced out as the piston moves towards the leaky valve.

In the 9½-inch air pump (Fig. 6), the air for both ends of the air cylinder enters through the inlet *W*; consequently, air will be drawn in on both the up and the down strokes. Suppose the lower receiving valve *86′* to leak; then, as the piston moves towards the valve, it compresses the air in that end of the cylinder and forces some through the leak. This air, instead of being forced out of the inlet port *W*, passes up through the passage *F*, past the upper receiving valve *86*, and through port *m*, into the other end of the cylinder; consequently, less air is drawn in through the inlet port, to fill this end of the cylinder. [See view (*c*).] To test for a leaky receiving valve in the 9½-inch pump, therefore, run the pump slowly and place the hand over the inlet port; the suction will be less on the stroke *towards* the leaky valve. Also, the stroke *towards* the leaky valve will be quicker than the one from it.

5. *Back Leakage From Main Reservoir.*—This may be due to a broken discharge valve, to a defective valve seat, or to the valve being held from its seat by dirt or gum. Any of these causes will allow air to be compressed into the main reservoir, but, when the pump is reversed, the air will flow back through the defective valve and hold the receiving valve for that end of the cylinder to its seat; consequently, there will be no suction for that end of the cylinder. Also, the strokes of the pump will

be uneven, the one *towards* the defective valve being the slowest. If the upper discharge valve leaks, it will be indicated by a continuous discharge of air from the air-cylinder oil cup, if it is opened. If the lower discharge valve leaks, it will be indicated by a continuous discharge of air from the plug hole in lower cylinder head.

6. *Air Passages or Discharge Pipe Stopped Up.*—Occasionally the air passages or the air-discharge pipe become partly closed with gum and dirt. This increases the back pressure on the pump. It has also another effect: when the air-inlet passages are choked, the pump does not draw in as much air at a stroke as it should; while a choked discharge pipe increases the leakage past the piston rings, and more power is therefore necessary to force air into the main reservoir. These effects will cause the pump to run slower than usual, and heat up.

If the air valves have too little lift, the effect will be the same as though the air passages were choked. If only one of the valves has too little lift, the strokes of the pump will be uneven—the faster stroke being *towards* the defective valve, if a receiving valve, or *from* it, if a discharge valve.

7. *Air Valves Stuck Shut.*—If it is a receiving valve, there will be no suction as the piston moves away from it; the strokes of the pump will be uneven, the one towards the defective valve being the faster. The pump will probably pound on the fast stroke, and it will also become heated. The reason why the strokes are uneven is that the vacuum, formed in the end of the cylinder in which the stuck valve is, works *against* the steam pressure on the stroke away from the stuck valve, and *with it* on the return stroke. If both receiving valves are stuck, there will be no suction on either stroke of the pump; the pump will pound and heat, and the red hand of the gauge will not move forwards. The strokes, however, will be even, but the pump will run faster than usual. If the air-inlet ports become frozen or stopped up, the effect will be the same as though both receiving valves were stuck shut.

If a discharge valve is stuck shut, the strokes of the pump will be uneven, the *slow stroke* being *towards* the defective valve;

there will be no suction as the piston moves *away* from it, and the pump will heat. The reason why the strokes are uneven, is as follows: The cylinder is full of air as the piston starts towards the stuck valve, and, since the valve is closed and the air cannot escape, it is compressed and offers a steadily increasing resistance to the movement of the piston. The stroke away from the stuck valve is assisted by this compressed air, which acts like a compressed spring to force the piston along. As the force exerted by the air acts against the steam pressure in the first instance, and with it in the second, it is evident that one stroke will be faster than the other.

Should *both* discharge valves stick, the pump will run faster than usual and heat badly, and there will be no suction on either stroke, the piston simply churning back and forth in the cylinder. In this case, also, the red hand of the gauge will not move forwards. If the discharge pipe is frozen or stopped up, it will have the same effect as if both discharge valves were stuck shut. When the strokes of the pump are uneven, the pump is generally referred to as being "lame."

8. *Main Reservoir Too Small.*—The use of a **small main reservoir** in heavy freight service is very often the cause of the pump overheating, since it does not hold sufficient air to release the brakes and recharge the auxiliaries promptly, and the pump, consequently, must be worked faster when the brakes are released. A pump is not as efficient when hot as when cold, since air, on entering a hot cylinder, expands, and, consequently, less is required to fill it at atmospheric pressure; hence, the pump, when hot, must make a greater number of strokes, to do a given amount of work, than when cold.

POUNDING IN PUMP.

14. Usual Causes.—Pounding in an air pump may be due to any one of a number of causes. It may be due to water in the cylinder; to the pump being loose on the brackets that hold it, or the brackets being loose on the boiler; to the main piston striking against cylinder heads; to the nuts *58* of the

8-inch pump, or corresponding nuts on the 9½-inch pump, working loose and striking the air-cylinder head; or to the air valves pounding on their seats, due to too much lift. In addition to the foregoing, the 8-inch pump may pound if the main valve strikes the stop-pin, or if the reversing piston strikes either the reversing-chamber cap, or the bottom of the reversing chamber itself.

Clearance in Pump.—The **clearance** in an air pump is purposely made as small as possible, the air as it is compressed in the air cylinder being relied on to act as a cushion for the pistons, to prevent their striking the cylinder heads. Packing rings that are badly worn, or receiving valves that are stuck, broken, or leaky, will destroy this cushioning effect of the air, and hence will allow the pump to pound. Also, the reversing plate, or the button on the reversing rod, may be so worn that the pump is not reversed in time to prevent the piston striking the heads and causing a pound.

Parts Too Long.—If either the stop-pin *50*, the main valve *7″*, or the stem of the reversing piston *23* is too long, it may make the main valve strike the stop-pin and cause a pound. The stop-pin is intended to prevent the main valve dropping down far enough (when steam is shut off) to allow the piston packing-rings to expand below the bushings and prevent the main valve rising.

The combined length of the main-valve spindle, reversing-piston stem, and stop-pin should be such that, when the reversing piston is bottomed on its bushing and the valve spindle is tight up against it, there will be about $\frac{5}{64}$ inch space between the bottom of the main-valve spindle and the stop-pin. When this space is provided, there will be no pounding of the main valve.

Reversing Piston Striking.—Before the reversing piston *23* can commence its upward stroke, the reversing valve *16* must close the steam port *a* in the upper steam-cylinder head and connect port *b* with the exhaust passage *c*. Therefore, as soon as the reversing piston, in moving upwards, closes the exhaust port *b*, the steam caught above it is compressed and forms a cushion

that brings the reversing piston and main valve to rest without pounding.

The small ports near the bottom of the reversing-piston bushing *22* connect the lower end of this bushing with the exhaust passage *f*. As soon as the reversing piston *23*, on its downward stroke, closes the lower one of these ports, it compresses the exhaust steam caught below it, and thus provides a cushion for this stroke. If, however, the packing rings are badly worn, the steam, instead of being compressed, will leak by them, thus reducing or totally destroying the cushion, and allowing the reversing piston to strike the cap, or the bottom of the bushing, as the case may be.

9½-INCH PUMP BLOWING.

15. Usual Causes.—A blow in the steam end of the 9½-inch pump may be due to: (1) a leak past the seat of the reversing valve *72*; (2) the reversing rod worn, and loose in the reversing-valve chamber cap; (3) a leak past slide valve *83*; (4) worn packing rings in either piston of the main valve *76*; (5) worn packing rings in steam piston *65*; or, (6) the gasket between the top cylinder head and the cylinder not making a tight joint.

1. *Reversing Valve Leaking.*—If the reversing valve *72* leaked through into port *f*, Fig. 6 (*b*), there would be a blow, since steam from the reversing-valve bushing would pass through ports *f* and *f'* and exhaust port *d* out into the atmosphere. This probably would be a light blow, however, and it would be continuous, since port *f* connects directly with the exhaust port *d*.

2. *Worn Reversing Rod.*—If the top of the reversing rod were worn so as to be loose in the cap nut *74*, steam could pass by the stem into the cap nut, and thence through port *x* and the passage that runs down alongside the reversing-valve bushing, into the top of the steam cylinder *61*. On the up stroke of the piston, this end of the cylinder is connected with the exhaust; consequently, the leak described would cause a constant, though light, blow during the up stroke.

3. *Slide Valve Leaking.*—If there were a leak past the slide valve *83*, it would cause a constant blow through the exhaust port *d* while the pump was working.

4. *Main-Valve Rings Blowing.*—Worn packing rings in piston *79* of the main piston valve *76* will also cause a constant blow at the exhaust during the time the pump is working, since chamber *E* is always connected with the atmosphere through the passage *t' t*, view (*d*). Chamber *B* (to the right of piston *77*) is connected with the exhaust only during the up stroke of the pump; hence, worn packing rings on piston *77* will cause a blow on the up stroke only.

5. *Steam-Piston Rings Blowing.*—Worn packing rings in steam piston *65* will cause a constant blow at the exhaust while the pump is working, since one end of the cylinder is always full of steam while the other end is connected to the exhaust, and steam can readily pass the packing rings. A leak past the steam-piston packing rings will generally produce the strongest blow of all.

6. *Leaky Gasket.*—The gasket between the top cylinder head and the cylinder may permit steam to escape into the exhaust passage *d' d''*, or into the steam passage *b' b''*. In the first case it will cause a blow on the down stroke only, since the upper end of the cylinder is connected to the steam supply on that stroke only. In the second case, the steam will escape from the upper end of the cylinder through the passage *b'*, port *b*, and out at the exhaust *d* to the atmosphere, on the down stroke. On the up stroke, steam will escape from the passage *b'*, through the leak in the gasket, into the upper end of the cylinder, and thence out through the exhaust. In the second case, therefore, the leak will cause a constant blow.

8-INCH PUMP BLOWING.

16. Usual Causes.—A blow will be produced in the steam end of the 8-inch air pump: (1) if the reversing valve *16* is worn so that steam can escape into the exhaust passage; (2) if the end of the reversing rod in the cap nut *20* is worn and allows steam to escape past it; (3) if the packing rings or the

pistons of the main valve *7*, or of the reversing piston *23*, are worn or broken; or (4) if the packing rings of the steam piston *10* are worn or broken.

1. *Reversing Valve Leaking.*—A constant blow will occur if the reversing valve is so worn that steam escapes through the ports *c*, *ff*, and *g* to the exhaust.

2. *Worn Reversing Rod.*—If the end of the reversing rod *17* in the cap nut *20* is worn, steam can escape by it and pass through the passage *x* into the upper end of the steam cylinder *3*. This will cause a blow on the up stroke, since the upper end of the cylinder is open to the exhaust on that stroke.

3. *Main-Valve Rings Blowing.*—If the packing rings in either of the pistons of the main valve are worn or broken, there will be a constant blow at the exhaust, since ports *f f* and *f' f'* are always in connection with port *g*, which leads to the exhaust at *Y*.

Reversing-Piston Rings Blowing.—If the packing rings in the reversing piston *23* leak, there will be a blow on the up stroke, the steam escaping past the packing rings *24*, thence through the small ports at the bottom of the reversing chamber, and on through the passages *ff* and *g* to the exhaust at *Y*. The blow will occur only during the up stroke, since there is no steam in chamber *d* above the reversing piston during the down stroke.

4. *Steam-Piston Rings Blowing.*—If the packing rings of the steam piston allow steam to escape past them, a constant blow will be produced, as explained in connection with the 9½-inch pump.

9½-INCH PUMP STOPS.

17. Usual Causes.—It should be remembered that certain defects in the pump governor will cause the pump to **stop.** To determine whether or not the governor is at fault, open the drain cock *106*, Fig. 6; if steam escapes freely, the trouble is not in the governor.

But little trouble has been experienced with the 9½-inch pump stopping, about the only thing that will stop one of these

pumps being a bent or broken reversing rod *71*, or a bad leak between the steam passage *b' b''* and the upper end of the steam cylinder, due to a defect in the copper gasket between the head and the cylinder. The former prevents the pump reversing, while the latter allows live steam to enter the exhaust end of the cylinder at each stroke, which increases the back pressure against which the pump is working; consequently, if the pump is not in good condition and is working against a high main-reservoir pressure, it may stop.

18. A Former Cause of Trouble.—Trouble was experienced with some of the first 9½-inch pumps, owing to the fact that the large piston *77* of the main valve could pass beyond and close the port *g''* in the bushing *75*, view (*d*). This prevented the admission of steam to chamber *B*, as a result of which the main valve was unable to take its stroke to the left, and the pump would stop. This was remedied by cutting a groove on the inside of the bushing, from port *g''* to the end; and, further, a steam space was provided behind the piston by turning the head down $\frac{1}{16}$ inch, except a portion at the center; thus, the steam can always pass freely to the back of the piston, which insures the valve making its stroke to the left, view (*a*). The tendency of the pump to stop at the top of its up stroke was thus overcome.

8-INCH PUMP STOPS.

19. Locating the Cause.—Since, in the 8-inch pump, there is no drain cock similar to *106*, Fig. 6, a different test must be made to determine whether the governor is reponsible for the pump stopping.

If the governor is operated by train-pipe pressure, close the cut-out cock *5* in the train pipe just below the brake valve, Fig. 1, and place the brake-valve handle in service position; this gradually reduces the pressure in the chamber *a* of the governor, Fig. 3; hence, the force exerted by the regulating spring *41* to close the pin valve *b* gradually increases. If the

pump does not start by the time the train-pipe pressure is fully discharged, the probability is that the pump, and not the governor, is at fault. Of course, if the governor has a relief port *c*, a constant blow from this port will indicate that the fault is in the governor.

If the governor is operated by main-reservoir pressure, close the cut-out cock as before, "lap" the brake valve, and then disconnect the air pipe from the governor at the union *z*. If the pump then starts, it indicates that the fault lies with the governor.

Another method that may be used when the governor is connected to either main-reservoir or train-pipe pressure, is to disconnect the steam-supply pipe to the pump at the union *X*, and note whether steam is supplied freely.

20. Usual Causes of Pump Stopping.—If the trouble is in the pump, it may be that: (1) the stop-pin *50* is broken or is too short; (2) the main-valve or reversing-piston packing rings are broken; (3) the reversing rod is bent or broken; (4) the reversing plate is loose or worn out; (5) the main piston-rod nuts are loose or broken; or, (6) the pump is very dry from lack of lubrication.

1. *Defective Stop-Pin.*—A stop-pin that is broken or is too short will allow the main valve to drop down sufficiently for the packing rings to expand below the bushings *25* and *26*. This will prevent the valve from taking an up stroke, and the motion of the pump cannot be reversed. In this case, steam will be admitted below piston *10* through the lower steam ports, and the pump will always stop on the upper end of the stroke.

Sometimes, in a case of this kind, the pump can be started by giving it steam and tapping lightly near the bushings. If this does not start it, and circumstances are such that the upper steam-cylinder head can be removed, it may be possible to forcibly raise the valve, although there is danger of breaking the packing rings or spiders in the effort.

If the valve cannot be raised in this way, the only remedy will be to remove the cylinder from the centerpiece and get at

it from below. This, of course, would not be attempted on the road.

If the main valve can be raised and the pump started, the governor should be cut out of service by means of a blind gasket, as explained in Art. **4**, and care should be taken that steam is not again entirely shut off during the remainder of the run, as, otherwise, the trouble might occur again, especially if the main-valve rings are much worn.

2. *Main-Valve or Reversing-Piston Rings Defective.*—Cases have been known where broken main-valve rings have blocked the valve, and prevented its movement, thereby stopping the pump. A bad leak past the reversing piston, due to broken packing rings, will allow so much steam to escape that the pressure in chamber *d* will be reduced considerably, and a sufficient back pressure may be exerted on the under side of this piston to prevent the pump reversing its motion.

3, 4. *Defective Reversing Rod or Plate.*—A broken reversing rod, or a loose or worn-out reversing plate, will also prevent the pump from being reversed.

If, every time the pump throttle is closed for a few minutes and then reopened, the pump takes an up-and-down stroke and then stops, it is an indication that for some reason the reversing valve *16* has not moved to its lower position, and the pump should be examined for the cause.

5. *Loose Air-Piston Nuts.*—If the trouble is due to none of the above causes, remove the lower air-cylinder head and examine for loose or broken nuts *58* on piston rod, for pieces of broken air valve, or for dirt between piston and cylinder head, which prevents the pump completing its stroke and operating the reversing valve.

6. *Pump Run Dry.*—The part that is most affected when a pump is allowed to become very dry is the reversing piston, and this is consequently liable to stick and stop the pump for want of lubrication. A light tap will frequently start it again, in which case oil should be used freely to protect the pump against the possibility of cutting.

If either an 8-inch or a 9½-inch pump stops, it can, in most cases, be started again by first closing the pump throttle until all the steam in the pump has condensed, and then opening it quickly.

QUICK-ACTION TRIPLE VALVE.

TIME REQUIRED TO CHARGE AUXILIARIES.

21. The Effect of the Size of the Feed Groove.—The triple valve, like any other mechanism that is used under varying conditions, and is subject to rough treatment, is liable to certain disorders, and it is of these that we will now treat.

As soon as an engine is coupled to a train, the engineer charges the latter. Air from the main reservoir is forced back through the train pipe, thence through the feed grooves of the triples, and into the auxiliary reservoirs. The feed groove is made of such a size that, with a constant train-line pressure of 70 pounds, it will charge an auxiliary from 0 to 70 pounds in about 70 seconds. A train with fifty auxiliaries would charge as quickly as a single auxiliary, if the pump could keep the train-pipe pressure constant at 70 pounds; but, as it cannot do this, more than 70 seconds is required to charge the train. On a train of only four or five cars, the auxiliaries will charge in about the same length of time as a single auxiliary; but, with longer trains, the time of charging depends on the size and condition of the pump, the number of auxiliaries to be charged, and the extent of leaks in the train pipe and auxiliaries, etc.

The feed grooves in some of the first quick-action triples were made smaller than the present ones, and, consequently, one of these triples required about 2½ minutes to charge an auxiliary with a constant train-line pressure of 70 pounds. Many of the plain triples, on the other hand, had feed grooves that were too large for the volume of the auxiliaries they controlled; consequently, these auxiliaries could be charged in about 40 seconds under the same conditions.

22. Auxiliary Charges Too Slowly.—As already stated, the feed groove is of such a size that, with everything in good

condition, it will charge an auxiliary from 0 up to 70 pounds in about 70 seconds from a train-line pressure of 70 pounds. The time of charging, however, does not depend entirely on the feed groove; the auxiliaries may **charge more slowly** from any of the following causes: The small openings in the strainer of the drain cup, Fig. 1, or in the strainer *16* in the triple valve, Fig. 9, may be partially stopped up, so as to restrict the flow of air to the triple valve; the feed groove may be partially closed with gum or dirt; or the auxiliary reservoir may leak.

If oil, cinders, scale, pipe fins, etc. get into the train pipe, they may clog the strainers and feed grooves, get into the graduating valve and hold it from its seat, unseat the triple slide valve, or cause wear that will allow auxiliary pressure to escape to the atmosphere. Dirt and cinders will work into the train line if the brake hose is not hung up properly when not in use; scale may come from the inside of the pipes, if they are not properly treated before being applied to a car, or if they corrode; or oil may bake in the pump, and scale off, and work back into the brake system; also, pipe fins, if not removed by the pipemen, may work loose and cause trouble.

23. Effect of Working Conditions.—It will thus be seen that the conditions of strainers and triples may not be the same on any two cars of a train; hence, the time required to charge the different auxiliaries may vary considerably, and, when possible, sufficient time should be allowed for all the auxiliaries to become fully charged before the brake valve is placed on *lap*, or the brakes applied again. If the valve is *lapped* while some of the auxiliaries are undercharged, they will continue to take air from the train line until they equalize with it, and thus may reduce train-line pressure sufficiently to apply the brakes on the cars on which the auxiliaries were fully charged. On the other hand, if a service reduction is made while some of the auxiliaries are undercharged, the latter may not apply the brakes on their cars at the first reduction, and they will continue to take air from the train line until they equalize with it; in this case, the other brakes will set harder than is intended.

EFFECT OF TRAIN-PIPE AND AUXILIARY LEAKS.

24. Train-Pipe Leaks.—Leaks in the train pipe not only increase the time required to charge the auxiliaries, but, after the brakes are applied, they cause the triples to gradually apply the brakes harder, or, as is usually said, the brakes "creep on." A leak at any part of the train pipe affects all the triples, since the train pipe is continuous throughout the train.

25. Auxiliary-Reservoir Leaks.—As long as the brakes are off and the triples are in *release* position, the pump will make good any leakage of auxiliary pressure, and no harm will be done, aside from keeping the pump at work to supply the leak. When the brakes are applied, however, and the triple slide valves are in *service* position, a reduction of pressure in any auxiliary will allow train-line pressure to force its triple piston to release position, and release the brake on that car. Then, since the feed groove is open in this position, air from the train pipe will feed into the auxiliary to supply the leakage and to charge the auxiliary to train-pipe pressure; hence, a reduction will be made in train-pipe pressure, that will tend to apply the other brakes harder. It is possible, however, for the auxiliary reservoir to leak, and still not cause the brake to "leak off" or release. If train-pipe leaks reduce train-pipe pressure at the same rate that the leakage from the auxiliary reduces auxiliary pressure, the brake will not leak off; or, if the packing ring *6* is much worn, sufficient air may leak past into the auxiliary reservoir to supply the leakage and thus prevent the brake releasing.

Leakage of auxiliary air at the triple exhaust is generally due to dirt on the seat of the slide valve, a worn slide-valve seat, a leak in the gasket that is between the triple valve and the brake cylinder (see passenger equipment, Fig. 8) or in the gasket *15* that is between the triple valve and the auxiliary reservoir in the freight equipment, Fig. 10.

IMPORTANCE OF GRADUATING VALVE.

26. The graduating valve *7*, Fig. 9, is the part of the triple that makes it most sensitive. If there were no graduating valve, but simply the service or graduating port *z*, and the

slide valve were fastened firmly to the stem of the piston, the brakes could still be applied and released, but the triple valve would not be nearly so sensitive, and great reductions would be necessary to move the parts. For instance, when a reduction of train-pipe pressure was made, the triple would assume service position; but it would not assume lap position again until a sufficient difference of pressure existed between the auxiliary and the train line to allow the latter pressure to overcome the friction, not only of the triple piston packing ring, but also of the slide valve, in which case the latter would be forced back far enough to close the service port *z* (lap position). Then, when it was desired to apply the brake harder, a much greater train-pipe reduction than usual would be necessary to move the triple piston to service position again, since the auxiliary pressure would have to overcome the friction of the slide valve as well as of the triple piston.

TRIPLE-VALVE LEAKS AND DEFECTS.

27. Blow at Triple Exhaust.—If a blow occurs at the exhaust port of the triple, it may be caused by any of the following: (1) A leaky slide valve; (2) dirt on the seat of the emergency valve *10*, Fig. 9, or a worn-out rubber seat *11*; (3) a leak in gasket *14* between the passage *a* and the chamber *I*; (4) a leak of auxiliary air from chamber *Y* to the passage *d*, owing to defective gasket between brake-cylinder head and triple valve, Fig. 8; (5) a leak from the auxiliary through gasket *15* in the freight equipment; or (6) the pipe *b*, which leads from the triple through the auxiliary to the brake cylinder, might be leaking.

1. *Leaky Slide Valve.*—This will generally cause a blow at the exhaust port of the triple, regardless of whether the slide valve is in service or in release position, since, in either position, auxiliary pressure can feed across the face of the valve into the exhaust cavity *g*, and out to the atmosphere through ports *h* and *k* (see Fig. 9). With a leaking slide valve, the tendency for the brake, when set, is to release itself, since auxiliary pressure is, in that case, being reduced.

Dirt on the seat of this valve will cause a constant leak at the triple exhaust; it will also cause the brake to be very erratic in its action, as sometimes the slide valve will seat properly and the brake remain set, while, at others, the dirt will allow auxiliary air to escape to the atmosphere across the face of the slide valve, and release the brake after being applied. A thorough cleaning of the triple is the proper remedy in such a case.

2. *Emergency Valve Leaking.*—If the emergency valve leaks, the blow at the exhaust port will cease, as explained above, if the exhaust port is closed by applying the brake.

If a strong, heavy blow exists at the triple exhaust, and the brake will not release on that car, the emergency piston *8* is, perhaps, being held down so as to keep the emergency valve *10* unseated. In this position, the train-pipe pressure raises check *15*, air passes into the brake cylinder through the large ports faster than it can escape to the atmosphere through the slide valve and exhaust ports, and the brake remains applied, because air is entering the brake cylinder faster than it can escape. A light tap on the outside of the triple will generally cause the emergency valve to seat.

When the emergency valve leaks, there is a constant leak from the train pipe through the quick-action part of the triple into the brake cylinder. If the triple is in release position, the air feeding into the cylinder escapes to the atmosphere through the triple exhaust; if the brake is set, the air cannot escape, and the train-pipe and brake-cylinder pressures equalize and apply this brake hard. If the leaky triple is in a long train, in which the volume of train-pipe air is comparatively great, the brake cylinder will equalize at such a high pressure, on the first light service reduction, that the wheels on that car will probably be slid.

3, 4, 5, 6. *The Other Causes.*—When the triple is in release position, the leak will, in these cases, and also in case 2, allow air to reach the brake cylinder, and pass through the slide-valve exhaust cavity into the atmosphere; but, when the brake is applied, the exhaust cavity of the slide valve no longer

connects port *f* with the exhaust port *h*, and so the blow does not occur at the exhaust. In this case, the air continuing to leak into the brake cylinder will apply the brake harder. If auxiliary pressure leaks into the brake cylinder, the tendency will be to release the brake; while, if the train line feeds the leak, the brake will be set tighter, and the leakage will also tend to set the other brakes tighter by reducing train-line pressure.

Of the possible sources of leakage given, the two that are most frequently met with are the slide valve and the emergency, or rubber-seated, valve.

28. Other Common Defects.—The most common causes of trouble in the quick-action triple valve are: (1) strainers stopped up; (2) dirt on the seat of the graduating valve; (3) defective graduating spring; (4) triple gummed up; (5) broken graduating pin, and (6) triple freezing up.

1. *Strainers Stopped Up.*—Sometimes a triple valve will not set the brake on a car in response to either a light or a heavy train-pipe reduction. This may be due to the strainers being partly stopped up; or the triple may be so gummed up and dirty that the triple piston cannot move.

When a quick-action triple in a train applies a brake in emergency, the quick-action part of the triple takes air from the train pipe suddenly and puts it into the brake cylinder. This sudden reduction is sufficient to start the next quick-action triple into emergency, the next one following, and so on throughout the entire train. If two or three cars with dirty strainers, or a couple of old cars with plain triples, are placed together in a train, the sudden reduction made by the quick-action triple ahead of these will not be sufficient to work the next quick-action triple immediately behind them, owing to the effect of friction on the flow of air through the train pipe destroying the suddenness of the reduction; hence, the quick-action effect cannot be obtained on these cars or on the ones back of them. On the other hand, if the engineer makes an emergency application with this train, and laps the brake valve too quickly, the air from the rear cars will flow ahead and kick off the head-end brakes, and only a light service application will be obtained on

the brakes back of the ones causing the trouble. If the brake-valve handle is left in emergency position a sufficient length of time, however, full emergency action will be had on the cars ahead, and full service on those back of the ones causing the trouble.

2. *Dirt on the Seat of the Graduating Valve.*—This will produce no ill effect when the triple is in release position, as the service port *z* is then closed by the slide-valve seat, and it will make no difference whether the graduating valve is open or closed. In lap position, however, this will cause a leak, which will allow auxiliary air to escape through the graduating valve and ports *z* and *f* into the brake cylinder, thus applying the brake harder and reducing auxiliary pressure.

Whether this reduction will allow the brake to release depends on whether the triple piston packing ring is tight or not. If it is tight and the auxiliary is in good condition, then auxiliary air will continue to leak into the brake cylinder until a sufficient difference of pressure exists between the train line and the auxiliary to start the slide valve moving, when it may move to release position and release the brake. If, however, air can leak by the piston packing-ring into the auxiliary reservoir as fast as it leaks by the graduating valve into the brake cylinder, the brake will continue to set harder instead of releasing. With a full application of the brakes, the auxiliary and brake-cylinder pressures are equal; therefore, under such conditions, a leaky graduating valve cannot release the brake unless the brake cylinder also leaks and reduces the auxiliary pressure at the same time.

3. *Defective Graduating Spring.*—The effect produced by a weak or broken graduating spring *22* depends on the length of the train. The duty of this spring is to prevent the parts of the triple valve from moving past service position, view (*d*), during a service application of the brakes. If the spring is broken or is too weak to stop the parts at service position, and if the train is a short one of seven cars or less, these parts will move to emergency position and apply the brake *quick action*, the other brakes, of course, following suit. With a long

train, on the other hand, the graduating spring can be removed entirely and not cause the brake to apply quick action.

The explanation of the foregoing is as follows: Since the graduating valve is open, auxiliary pressure begins to discharge into the brake cylinder as soon as port *z* of the slide valve arrives above port *f* in the seat. Now, whether the parts will move beyond this position and cause an emergency application of the brakes, depends on whether the train-pipe or the auxiliary pressure reduces the more quickly. A short train pipe contains a comparatively small volume of air; this discharging through the brake valve has its pressure reduced at a much greater rate than the auxiliary pressure that reduces through the graduating valve; hence, as soon as a sufficient difference in pressure is formed, the parts of the triple valve are moved forwards, and the brakes are applied in *emergency*. With a long train, however, the volume of air in the train pipe and the frictional resistance to its movement are so much greater that train-pipe pressure cannot be reduced through the train-pipe exhaust of the brake valve as fast as auxiliary pressure is reduced through the graduating valve. As a result, train-pipe and auxiliary pressures remain about equal, and a sufficient difference of pressure is not formed after service position is reached to move the parts of the triples to emergency position.

4. *"Sticky" Triples.*—A **sticky triple** is frequently the cause of the brakes applying quick action during a gradual train-pipe reduction. Generally, when a triple sticks, it does not respond to the first service reduction, nor, in some cases, to the second, and the brake on that car does not set; usually, with the next reduction, the difference in pressure between the auxiliary and the train line is such that the triple piston is torn loose from the gum and caused to move quickly forwards, compressing the graduating spring *22*, and moving the slide valve to emergency position. The sudden train-pipe reduction caused by the quick-action part of the faulty triple coming suddenly into play, starts the next triple into quick action, which affects the one following, and so on throughout the train.

5. *Broken Graduating Pin.*—If the pin that fastens the graduating valve 7 to the stem of the triple piston is broken,

the graduating valve will be held on its seat by auxiliary pressure, and the brake on that car will not apply until a sufficient reduction is made to move the triple slide valve to emergency position, when it will set quick action. With a light service reduction, the triple assumes service position, but the graduating valve being on its seat, no air can pass from the auxiliary to the brake cylinder, and the brake does not apply on this car. With only a light reduction, the auxiliary pressure acting on the triple piston is not sufficient to compress the graduating spring, but, when a second train-pipe reduction is made, the auxiliary presssure is sufficiently greater than that in the train pipe to force the triple piston out and compress the graduating spring, and the triple then assumes emergency position. If the graduating valve is so badly gummed up that air can only escape very slowly through it, the effect will be the same as though the graduating pin were broken.

6. *Triple Freezing Up.*—Water sometimes accumulates in the drain cup of the triple valves. In cold weather, this water may freeze and cause trouble. In thawing out a triple, always remove the drain plug and drain off the water to avoid a recurrence of the trouble. The water found in the brake system comes mostly from the moisture drawn into the pump along with the air; as the air is compressed, this moisture is given up, and some of it works back into the brake system.

29. Locating the Cause of Trouble.—To locate a sticky triple, or one with a broken or badly gummed-up graduating valve, make a service reduction that is not quite sufficient to cause the defective triple to operate quick action, and then look for the brake that has not set. Cut this one out, and repeat the test to make sure the trouble has been properly located. If all brakes go into emergency with the first light service reduction, the only way to locate the faulty triple will be to first close an angle cock in the middle of the train, and try to locate the trouble in one half first; then proceed in the same manner with the half that is known to contain the faulty triple, and so on until the search has been narrowed down to four or five cars. The brakes

may then be applied and the pistons of these cars watched to see which one jumps first, or the cars may be cut out one at a time until the trouble is located.

PLAIN TRIPLE VALVE.

WHERE USED.

30. The plain triple valve, Fig. 7, is usually found only on engine, tender, and old passenger-car equipments. The parts of this triple correspond to the service parts of the quick-action triple, and they are liable to the same disorders. The graduating spring *10* in the plain triple serves the same purpose as the one in the quick-action triple, but it is comparatively of little importance, since, when a plain triple goes into emergency, it does not affect the other triples, as it does not take air from the train pipe.

LEAKS AND OTHER DEFECTS.

31. Leaks.—Among the most common sources of trouble in the plain triple are leaky slide and graduating valves, or a blow at the exhaust port.

Leaky Valves.—A leaky slide valve or graduating valve will affect the brake in the same manner as the same defect in a quick-action triple would.

Triple Exhaust Blowing.—A blow at the exhaust port *k* may be caused by a leaky slide valve *3* or plug cock *13*. As in the case of the quick-action triple, there will be a continuous blow at the exhaust port if the slide valve leaks, regardless of whether the brake is applied or released. If the plug cock *13* leaks, and the slide valve is in release position, air from the train line entering at *W* will leak by the plug valve into port *e*, thence through port *f*, cavity *g* of the slide valve, and ports *h* and *k*, to the atmosphere. If the brake is set, the slide valve will be in such a position that cavity *g* will be closed to port *f*, and the blow at the exhaust will cease; but the air leaking by the plug cock will pass out to the brake cylinder at *X* and set

this brake tighter. With the plug cock leaking, the train-pipe and brake-cylinder pressures will gradually equalize, and, on a long train having a large volume of air in the train pipe, the train-pipe and brake-cylinder pressures might equalize sufficiently high to slide the wheels.

32. Other Defects.—Under this heading may be mentioned defective rings and the freezing up of the triple.

Defective Rings.—A worn piston packing-ring *6* will allow air to feed by the piston, and may charge the auxiliary too quickly. On a long train, a slow train-pipe reduction might allow auxiliary pressure to feed back through the feed grooves *m* and *n*, and past the packing ring, sufficiently fast to keep equal with train-pipe pressure, in which case the triple piston would not be forced out, and the brake would not apply; or in releasing brakes, if train-pipe pressure is increased slowly, it might feed by the packing ring sufficiently fast to charge the auxiliary and leave the brake set.

Triple Freezing Up.—Water may collect in chamber *A*; in cold weather, therefore, the latter should be drained frequently by partially unscrewing the lower cap nut *11*.

CARE OF TRIPLES.

33. Triple valves should be inspected and thoroughly cleaned and oiled at least once every six months. In **cleaning the triple,** it is a good idea to immerse the triple piston in kerosene while cleaning the other parts. The emergency parts of the quick-action triple should be removed, examined, and cleaned, and then replaced without oiling, as these particular parts are seldom used, and oil would only serve to collect dirt. The slide valve and the chamber in which it works should be thoroughly cleaned, and great care should be exercised to remove any lint from the valve or its seat. The graduating valve and all small ports should be carefully cleaned. After everything else has been attended to, the triple piston packing ring should be cleaned carefully, *without being removed from the piston*, as in so removing it there is great danger of springing

the ring out of true. Before replacing the piston, the ring should move freely to the touch, and in entering the piston into its bushing, care should be taken not to bruise the packing ring.

The graduating stem should be forced in with the thumb to make sure that the graduating spring is doing its work properly. The only parts of the triple that need oiling are the triple piston packing ring, the bushing in which it works, and the face of the slide valve; sufficient oil can be held on the end of the finger to oil these parts. Too much oil is a detriment rather than a benefit, since it collects scale and dirt. The strainer in the triple, and the one in the train-pipe tee, where the branch pipe couples on, should always be kept clean.

FREIGHT EQUIPMENT.

LEAKS AND OTHER DEFECTS.

34. Leaks.—In addition to the causes of trouble already given as occurring in the triple itself, the freight equipment shown in Fig. 10 is liable to various leaks, as follows:

Defective Gasket.—The gasket *15* between the triple valve and the auxiliary may leak, allowing air to pass from the auxiliary into pipe *b*, and thence to the brake cylinder; or, from the auxiliary to the atmosphere. The leak between the auxiliary and the brake cylinder will cause a blow at the triple exhaust port when the triple is in release position. After the brake is applied and the triple is in service position, however, the leakage of auxiliary air across the gasket, either to the brake cylinder or the atmosphere, will tend to release the brake.

Pipe Leaking in Auxiliary.—If pipe *b* leaks inside of the auxiliary, the same effect will be noticed as if the gasket *15* leaked between the auxiliary and pipe *b*.

Leaky Valves.—A leaky release valve *17* will allow a constant escape of auxiliary air to the atmosphere. With the triple valve in release position, the pump will supply this leak and no ill effect will be noticed aside from the extra work put on

the pump; when the brake is applied, however, the escape of air reducing the auxiliary pressure will tend to release it.

35. Other Defects.—There are also certain other defects of the various parts that may give trouble.

Split Sleeve.—The sleeve *3* sometimes splits, owing to the side motion of the push rod that works inside it. When this occurs, the release spring cannot force the brake piston to release position when brakes are released, as it binds in the hood of the cylinder; consequently, the brake shoes tend to drag on the wheels.

Defective Spring.—If the release spring *9* is weak, it will not force the brake piston to release position properly, especially if the cylinder is somewhat dirty; as a result of this, the piston may stay out after the triple has moved to release position and allowed the air to escape from the cylinder. In such a case, the sleeve and piston will gradually work in when the car is moving, since the jar of the wheels against the shoes will work them away, and cause the rods and levers to assume their normal release positions.

Defective Packing.—If the packing leather *7* is cracked or worn through on the bend of the flange, it will be impossible to set that brake and keep it on, for, as the air enters the cylinder, it will escape past the piston, and the brake will gradually leak off. Sometimes a brake in this condition will not apply with a service application, but will do so with an emergency application, after which it gradually leaks off.

Leakage Groove Stopped Up.—If the leakage groove *a* becomes stopped up with dirt or gum, and the piston travel happens to have been taken up short enough, the pressure on the brake piston may get so high that the wheels on this car may slide when the brakes are applied. If such a car were near the rear of a long train, the train pipe of which leaked, the reduction due to the leak might work the triple piston out far enough to close the exhaust port and allow some of the auxiliary-reservoir air to reach the brake cylinder. The air feeding in slowly would blow through the leakage groove were it open; but, being

closed, the brake of this car would gradually apply and might stall the train.

Expander Ring Out of Place.—The duty of the expander ring *8* is to hold the flange of the packing leather against the walls of the cylinder. If the expander ring worked out, due to its not being put in properly, the flange of the leather would drop down, and all air entering the cylinder would probably escape past the piston to the atmosphere.

CARE OF EQUIPMENT.

36. Cleaning and Oiling the Cylinder.—When the cylinder head and piston are removed, the walls of the cylinder should be thoroughly cleaned with waste saturated with kerosene, and special care should be exercised to free the leakage groove of all dirt or gum; the cylinder should then be wiped dry.

The expander ring should be removed, and both that and also the groove in which it rests be thoroughly cleaned; then, before the ring is replaced, a small amount of oil should be put into the groove. Before replacing the piston, the cylinder walls should be thoroughly oiled or greased, by covering the hand with the oil or grease and then rubbing the walls with the hand. When the cylinder is oiled through the oil plug *16*, care should be taken not to put in so much that, when the piston is moved to release position, the oil will be forced through pipe *b* into the triple, as this will decay the rubber-seated valve and render the triple useless until repaired.

37. Cleaning and Oiling Triples.—In cleaning and oiling triples, *all* parts should be thoroughly cleaned. It is not necessary to oil the emergency parts, and sufficient oil can be held on the end of the finger to oil the slide valve, its bushing, the triple piston packing ring, and the bushing in which it works. The strainer, where the branch pipe couples to the triple, should also be cleaned, as well as the one where the branch pipe joins the main train pipe.

RETAINING VALVE.

ITS DUTY AND OPERATION.

38. Duty.—The primary object of the retaining valve is to retain a pressure of 15 pounds in the brake cylinder, during the time the triple is in release position, while the engineer is recharging the auxiliaries in descending a grade. It has no effect whatever on any brake except that of the car on which it is placed, and it only affects the releasing of that brake, since it merely retains 15 pounds pressure in the brake cylinder.

The retainers, however, often perform another duty, namely, to keep the slack of a freight train bunched after brakes have been released, and the train is drifting preparatory to making a stop. Two or three of the head-end retainers judiciously used in such a case will often prevent a bad jar at the rear of a train.

The retainer is used on almost all cars in freight service, and, in mountainous districts, on passenger cars also. A retainer when in service holds 15 pounds pressure in the brake cylinder, while the brake is released, regardless of whether the piston travel is long or short.

39. Testing.—To test a retaining valve, the handle should be turned up and the engineer then signaled to apply and release the brakes. Shortly after air ceases to discharge from the retainer, the handle should be turned down, and, if air discharges through port *e*, the retainer may be considered to be all right.

40. Use on Grades.—In using the retaining valves on a grade, it is best not to raise the handles until the train is rounding the summit of the hill. If the retaining handles are turned up before the summit is reached, and the leakage groove in any of the brake cylinders should happen to be stopped up, any leak that would allow air pressure to reach that cylinder would set the brake, and perhaps stall the train.

GAINS DUE TO USE OF RETAINING VALVE.

41. The following remarks will give an idea of the **gain effected** by using the retaining valve in handling trains on grades: With train pipe and auxiliary fully charged, and the piston travel adjusted to 8 inches, a 5-pound train-pipe reduction will give a brake-cylinder pressure of about 10 pounds; with this brake full-set, a pressure of about 50½ pounds is developed in the brake cylinder. If the retainer handle is now raised, and train-pipe pressure is increased so as to force the triple-valve piston to release position, the auxiliary will be recharged to 70 pounds, *while the brake cylinder will retain 15 pounds.* This will cause the brake cylinder and auxiliary to equalize on succeeding applications at about 56 pounds, instead of 50, as long as the retaining valve is cut in. This not only gives a greater braking power, but also saves air, since a reduction of only about 15 pounds is necessary to make a full application of the brakes. Then again, with 15 pounds already in the brake cylinder, a 5-pound reduction will give a brake-cylinder pressure of about 38 pounds. It is thus seen that by using retainers, a large gain in braking power is made with the first 5-pound reduction, a gain is made when the brake is full-set, less air need be wasted to apply the brake in full, and less time is required to recharge after a release is made.

With the piston travel adjusted to 8 inches, an emergency application without a retaining valve develops about 57½ pounds in the brake cylinder, while, with a retaining valve, a brake cylinder pressure of about 62 pounds is developed. This also shows a slight gain in favor of the retaining valve.

The gain made with a 5-pound train-pipe reduction, after the retaining valve is cut in, appears, at first glance, to be out of proportion, but it should be remembered that, when the retaining valve is not in use and a train-pipe reduction is made, part of the first auxiliary air that enters the brake cylinder escapes through the leakage groove to the atmosphere, before the piston has moved out far enough to close it. Some air also blows past the packing leather before the flanges are forced tightly against the cylinder walls. This loss does not occur

when the retaining valve is in use, as the 15 pounds retained by it holds the piston out far enough to cover the leakage groove; it also holds the flanges of the packing leather against the cylinder walls.

It will thus be seen that a retaining valve is not only an aid in controlling the speed of the train while on a down grade, during the time the pump is recharging the auxiliaries, but it is also an adjunct that causes a more powerful braking force to be developed while it is in use.

The figures given are for a retaining valve that holds the full 15 pounds in the brake cylinder. This amount has been found by repeated tests to be the standard pressure for cars in interchange service. This pressure gives good results in braking on long grades, without excessive heating of wheels.

LEAKS AND DEFECTS.

42. The retaining valve, Figs. 12 and 13, will be *rendered useless* by any of the following defects: (1) A leak at the union in the retainer pipe near the triple valve. (2) A leaky plug cock *6* that allows the pressure that should be retained in the brake cylinder to leak by the plug valve into port *e*, and thence to the atmosphere. (3) Dirt on the seat of the weighted valve *4*, which will hold the valve from its seat and allow the air to pass by the valve and out to the atmosphere at port *d*. (4) A leak at the joint where the retainer screws on to the retainer pipe, which also allows the brake-cylinder pressure to escape to the atmosphere. (5) A split in the pipe leading to the retaining valve, or a leaky packing leather in the brake cylinder; either of these defects will produce the same effect as an imperfect retaining valve. (6) Port *d* being stopped up; for all the air will be retained in the brake cylinder when the brakes are released, and, consequently, the brake will remain set with full force. (7) If the retaining valve is not placed perpendicularly on the car, the weight will not hold the valve on the seat, and air will leak past.

D-8 BRAKE VALVE.

DEFECTS.

43. Testing Excess-Pressure Spring.—If the pump is started with the brake valve in full release, both red and black gauge hands should *move up together*, as, in this position, main-reservoir, equalizing-reservoir, and train-pipe pressures are all directly connected. If the gauge hands do not stay together, the gauge is incorrect, and should be reported for adjustment. With this valve, the pump governor is operated by train-pipe pressure; consequently, it stops the pump when train-pipe pressure reaches 70 pounds, and, with the brake valve in release position, both hands of the gauge should register this amount when the pump stops.

If the pump is started with the valve handle in *running* position, the red hand should be 20 pounds in advance of the black one; and, when the pump stops, the black hand should register 70 pounds and the red hand 90. If the black hand indicates 70 pounds, but the red hand indicates less than 90, the excess-pressure spring *20*, Fig. 14, is either too short or too weak. If the black hand stands at 70 pounds and the red above 90, the excess-pressure spring is too stiff, or the valve *21* needs cleaning, to make it work more freely.

Should the spring *20 break*, lengthen the longer piece by stretching until it will hold the excess-pressure valve to its seat with sufficient force to maintain, as nearly as possible, the proper excess pressure. If the spring breaks near the middle, it may be necessary to force a small piece of wood into the valve *21*, so as to partially fill it and thus compensate for the short spring. The broken spring should be replaced by a new one at the first opportunity.

If the spring is *too weak*, it should be removed and lengthened by stretching until of the proper strength. If *too stiff*, it should be shortened by cutting off a piece. If, when the pump stops, the black hand registers either more or less than 70 pounds, and the red hand shows that the proper excess pressure is maintained, then the pump governor needs adjusting. To do this,

remove the cap nut *39*, Fig. 3, and unscrew the nut *40* to adjust for a lower train-pipe pressure, or screw it down for a higher pressure.

44. Brake Valve Fails to Maintain Excess Pressure. If, with the valve in running position, both hands remain together all the time, and no excess pressure is maintained, the trouble is caused by a leaky rotary valve or by dirt on the seat of the excess-pressure valve *21*. Sometimes this leak from the main reservoir into the train pipe is so slight that it does not affect the excess pressure when the engine is coupled to a train; but, when the engine is alone, no excess pressure can be maintained, as the train pipe equalizes with the main reservoir. In the former case, leaks out of the train pipe compensate for the slight leak into it; while, in the latter, the train pipe is so short that practically no air leaks out, in which case the leak into it soon causes the train pipe and main reservoir to equalize.

45. Testing for Leaky Rotary.—To test for a leaky rotary, close the cut-out cock below the brake valve, and start the pump with the valve handle on lap position. In this position all ports are blocked, and any leak into the train pipe will cause a blow at the train-pipe exhaust, or will be indicated by the black hand of the gauge.

A method that can be used when the brake system is charged is to close the cut-out cock *5* in the train pipe under the brake valve, make a service reduction of 30 or 40 pounds, and lap the valve; then, any leakage of main-reservoir air into the train pipe will be indicated by a blow at the train-pipe exhaust.

Still another method is to fully charge the main reservoir and place the brake valve on lap; drain all air from the equalizing reservoir, the engine and tender auxiliaries, and the train pipe, and see that all bleed cocks are closed; then open the angle cock at the back of tender, and place the end of the hose in a pail of water. Any leakage of main-reservoir pressure into the train pipe will be indicated by bubbles rising to the surface of the water. Although this method will detect a smaller leak, the others are sufficiently accurate, and can be tried more easily.

EXCESS-PRESSURE VALVE FAULTS.

46. Dirt on Valve Seat.—If the rotary does not leak, the trouble must be in the excess-pressure valve. In fact, dirt on the seat of the excess-pressure valve is generally found to be the source of trouble when excess pressure cannot be maintained.

47. Removing the Valve.—If necessary to remove the excess-pressure valve *21*, for cleaning or otherwise, close the cut-out cock *5* under the brake valve, Fig. 1, and place the valve in service position before attempting to remove it. Closing the cut-out cock retains the air in the train pipe and auxiliaries; while placing the brake valve in service position closes port *f* to main-reservoir pressure, and empties chamber *D* and the train pipe above the cut-out cock *5*, thus removing all pressure from the excess-pressure valve. The valve may then be removed by unscrewing the cap nut *19*. *Clean both the valve and its seat thoroughly*, being careful not to scrape the face or seat of the valve with any hard material. Before replacing, place the brake-valve handle in running position for a second or two, to blow out any loose dirt or scale that may be in the ports leading to the valve.

48. Valve Stuck Shut.—Occasionally, the excess-pressure valve becomes stuck shut, so that air cannot pass through it into the train pipe when the brake valve is placed in running position. This results usually from the use of too much or poor oil in the air end of the pump; the oil forms a gum that gradually blocks the excess-pressure valve and may also cause trouble in other parts of the air-brake system. With the excess-pressure valve stuck, the engineer very often goes over the road with the brake-valve handle in full release, and with no excess pressure. This is a very bad practice and one that should be avoided. If the excess-pressure valve sticks, take it out and clean it. This can be done in a few minutes, and will cause very much less delay than if it were allowed to remain stuck and the valve carried in full release, as in the latter case the brakes are liable to stick after each application. If the

excess-pressure valve *21 works stiffly* in the cap nut *19*, the valve will be less sensitive than usual and the excess pressure will fluctuate; that is, when the valve works stiffly, more than 20 pounds excess pressure must be obtained before it will open, while, on the other hand, it will not close until the excess pressure is less than 20 pounds.

49. Leaks.—A leak in the rotary valve or past the excess-pressure valve that will allow train-pipe and main-reservoir pressures to equalize, will maintain them equal; and, since with this brake valve the governor is set to stop the pump as soon as a train-pipe pressure of 70 pounds is obtained, the pump will not start again until the pressure in both train pipe and main reservoir is reduced to that amount. Thus, a considerable reduction in train-pipe pressure must take place, which is very liable to cause the brakes to "creep on."

50. High Excess-Pressure.—If this brake valve is lapped before train-pipe pressure is obtained, the governor will not stop the pump, which will continue to operate until sufficient main-reservoir pressure is accumulated to stop it. With a high excess pressure, as in this case, care must be exercised in releasing the brakes; that is, do not leave the valve too long in release, for, if the main reservoir were allowed to equalize with the train pipe and auxiliaries, they would be charged to such a pressure—especially with a short train—that it would be liable to burst some of the hose or else slide the wheels when the brakes were applied. On some roads a duplex pump governor is used to prevent overcharging—one side being set at 70 pounds and operated by train-pipe pressure, the other being set at 90 pounds and operated by main-reservoir pressure. In this way, the pump is stopped as soon as either the main reservoir or the train pipe is charged to the desired pressure. This practice gives very good results.

51. Rotary Valve Turns Hard.—When the rotary valve is hard to turn, it does not necessarily indicate that the valve needs oiling. The nut that holds the handle *8* on may be screwed down so tight that the gasket *12* binds.

52. Peculiarity of D-8 Valve.—A peculiarity of this brake valve is that, if placed in a position midway between the service and the emergency positions—in which position the direct-application-and-supply port *l* is connected by cavity *c* of the rotary valve with the exhaust port *k*—the black hand of the air gauge, instead of dropping back to zero, will indicate the amount of pressure in the main reservoir.

The reason for this is that, in this position, port *j* of the rotary valve is directly above port *g* in its seat; consequently, the equalizing reservoir equalizes with the main reservoir, and, since the black hand indicates the pressure in the equalizing reservoir, it must, in this position, indicate main-reservoir pressure also.

PORT h AND PORT-AND-GROOVE e.

53. Size of Port h.—The hole through the plug in port *h*, view (*b*), is made of such a size that equalizing-reservoir pressure will be reduced from 70 to 50 pounds, in service position, in from 4 to 5 seconds. If it takes longer than this, the packing ring in the equalizing piston is probably so loose that the train-pipe pressure leaks into chamber *D* above the equalizing piston, or else the preliminary-exhaust port *e*, view (*c*), is partially closed with dirt or gum. If port *e* is closed entirely, a service application cannot be made with the brake valve.

54. Small Groove in the Rotary Seat.—This groove, which connects with port *e*, is made of such a length as to connect chamber *D* with the main reservoir (through port *j* and the groove-and-port *e*) from the instant the train line is connected with main reservoir through port *a*, cavity *c*, and the supply port *l*, view (*c*). The combined area of the ports *e* and *g*, which lead to chamber *D*, is such that, ordinarily, chamber *D* will charge as fast or faster than the train pipe. Without the groove, however, the train pipe would be connected with the main reservoir—through port *a* and cavity *c*—both before port *j* made connection with port *e*, in moving the valve *to* release position, and also after it had broken connection with

this port in moving *from* release position. At such times, therefore, train-pipe pressure would generally increase faster than the pressure in chamber *D*; consequently, a discharge would probably occur at the train-pipe exhaust valve for an instant or two, while moving the brake valve into release position.

RECHARGING SHORT TRAIN.

55. When the train pipe is short, as, for instance, on a lone engine and tender, a discharge generally occurs at the train-pipe exhaust valve for a second or two when the brakes are released. The reason for this is that the capacity of the train pipe is small, while the ports through which it is charged are large compared with the area of the ports through which chamber *D* is charged; hence, the pressure in the train pipe increases faster than that in chamber *D*, and therefore raises the equalizing piston. This opens the train-pipe exhaust valve *E*, and a discharge takes place until train-pipe pressure is reduced below the pressure of chamber *D*, after which the valve is closed. This will occur with either a D-8 or an F-6 brake valve.

With a long train pipe, this discharge does not take place, for the reason that the volume to be filled is so much greater that the pressure in chamber *D* increases faster than train-pipe pressure; consequently, the equalizing piston is held on its seat.

F-6 BRAKE VALVE.

TESTING.

56. Testing the Gauge.—If the pump is started with the brake valve in *full release*, the hands of the air gauge will *move up together* until they both register full main-reservoir pressure. The pump governor, when used with this valve, is operated by main-reservoir pressure, and does not stop the pump until main-reservoir pressure is obtained; consequently, the gauge hands will move up together and register the same pressure when the pump stops, since, in release position, there

is a direct connection between the train pipe and the main reservoir. If the hands do not move up together, the gauge is incorrect and should be reported.

If the pump is started with the brake valve in *running position*, the hands of the gauge will move up together until full train-pipe pressure is obtained; the feed-valve attachment then closes and the black hand, consequently, remains stationary, but the red hand continues to move up until full main-reservoir pressure is obtained.

57. Testing the Pump Governor.—If, with a correct gauge, the black hand indicates 70 pounds when the pump stops, while the red hand indicates either more or less than proper main-reservoir pressure, the pump governor needs regulating. This is accomplished by removing the cap nut *39*, Fig. 3, and slacking the regulating nut *40* to regulate for a lower, or screwing it tighter for a higher, main-reservoir pressure.

58. Testing the Feed-Valve Attachment.—If the red hand indicates the main-reservoir pressure correctly, but the black hand indicates either more or less than 70 pounds, then the feed-valve attachment needs regulating. This is accomplished by removing the cap nut *71*, Fig. 16 (*b*), and slacking the regulating nut *70* to reduce, or screwing it up to increase, the train-pipe pressure.

LEAKS AND OTHER DEFECTS.

59. Feed Valve Fails to Maintain Train-Pipe Pressure.—If, in running position, the feed-valve attachment fails to maintain train-pipe pressure at 70 pounds, and the black hand gradually moves up until it indicates the same as the red hand, the trouble is due to a leak from the main reservoir into the train pipe, either through the rotary valve, the gasket *32*, the supply valve *63*, or by the feed-valve case gasket *27*.

60. Leaky Rotary Valve.—A leak in the rotary valve generally occurs past the bridge *w*, so that main-reservoir pressure can pass down port *a* and leak into cavity *c* of the valve, thence passing to the train line through port *l*. Any leak from

the main reservoir into the train pipe, therefore, tends to release the brakes when they are applied. The test for a leaky rotary of an F-6 valve is the same as with the D-8.

61. Leaky Gasket.—A leak in the gasket *32* generally allows main-reservoir pressure to pass from the passage $X\,x'$ into chamber D above the piston *17*, view (*a*). Since the capacity of the equalizing reservoir is small, such a leak will cause the black hand to quickly move up to the position of the red hand when the brake valve is lapped. It will also make the service reductions slower than usual, since the air feeding into chamber D tends to maintain the pressure there, and, if the leak were a very bad one, it would prevent any service reduction being made at all. With chamber D pressure greater than train-pipe pressure, as in the above case, air will leak past the equalizing piston packing ring *18* into the train pipe.

Testing for Leaky Gasket.—A leak in gasket *32* may be detected by placing the brake valve on lap and watching the gauge; if the gasket leaks, the black hand will move up rapidly towards the red hand. A leak through the rotary valve or the gasket *32* can be readily distinguished from a leak in gasket *27* or supply valve *63*, since the former are constant while the two latter occur only when the brake valve is in running position.

62. Leak Past the Supply Valve.—A leak past the supply valve may be due to a leaky valve, to the valve being held from its seat by dirt or gum, or to a defective diaphragm *72*, view (*b*). To determine which of these is causing the trouble, the supply valve must be removed and inspected.

To remove the valve, close the cut-out cock *5* under the brake valve, Fig. 1, and place the brake valve in service position, so as to remove all pressure from the feed-valve attachment. Unscrew the cap nut *65*, and remove the feed valve.

To clean the valve, soak it in kerosene, or heat it in steam, and then wipe dry with clean cloth or waste. The valve seat may be cleaned with a piece of wood.

The face of the supply valve is made of soft metal, and, therefore, should never be scraped with any hard tool, as the

valve may thus be ruined. In case of a leaky supply valve, grind it to a tight fit by placing carefully on its seat and turning with the fingers while applying a light pressure. The spring box *69* must be taken out and the piston *74* pulled down so as to allow the supply valve to rest firmly on its seat. Do not use emery, as it is unnecessary and will cause trouble if it gets into the brake system. The supply valve cannot stand much grinding. Before replacing the supply valve, put the brake valve in running position for a second or two, to blow out any loose dirt there may be around the supply-valve seat.

63. Defective Diaphragm.—The edges of the diaphragm *72* may be so crushed and squeezed out, if the spring box *69* is screwed up too tight, that the diaphragm will "arch up" and thus almost entirely prevent movement of the feed-valve piston *74*; consequently, the supply valve will be held from its seat. The spring box *69* should only be screwed up until a firm joint is made with the diaphragm, and not until it makes a tight joint with the feed-valve case *62*.

If the trouble in the feed-valve attachment is in the gasket *27* or the supply valve *63*, it may be readily repaired while on the road, but if in the diaphragm *72*, repairs had better not be attempted until the end of the run. In this case, no excess pressure can be carried, and train-pipe pressure will have to be regulated by means of the pump throttle.

64. Feed-Valve Piston Sticking. — Trouble is sometimes experienced in removing piston *74*, on account of its sticking. In such a case, proceed as follows: Remove the supply valve *63* as described, and replace the cap nut *65*; unscrew the spring case *69*, grasp the stem *66* of the piston in the right hand, and move the brake-valve handle carefully to running position. Main-reservoir pressure acting on top of piston *74* will blow it out. When replacing the piston, be sure that packing ring *67* works freely, and do not bruise it by pounding in getting the piston back.

65. Leaky Feed-Valve Case Gasket.—A leak sometimes occurs in the gasket *27*, between the feed ports *f' f''* and *i*, which allows main-reservoir air to pass directly into the train

pipe when the brake valve is in running position. This can sometimes be stopped by simply tightening the nuts of the feed-valve studs, view (*e*). If it cannot, then close the cut-out cock under the brake valve, place the valve in service position, remove the feed-valve case from the brake-valve body, and replace the blown-out gasket with a temporary one made of pasteboard, part of an old felt hat, or of anything similar that is at hand.

66. Leaky Train-Pipe Exhaust Valve.—Sometimes the train-pipe exhaust valve *E* is held from its seat by dirt or gum. This causes a continual blow at the exhaust valve, and, consequently, when the brake valve is on lap the brakes will gradually set harder. It may be possible to close the train-pipe exhaust valve by quickly moving the brake valve from full release to emergency and back again a couple of times. If not, the equalizing piston will have to be removed and cleaned.

67. Preliminary-Exhaust Port Plug.—The size of the passage through the plug in preliminary-exhaust port *e* is such that, during a service reduction, equalizing-reservoir pressure should be reduced through it from 70 to 50 pounds, in about 5 seconds. If it does not, the trouble is due to one of the following causes: Either the size of this passage is reduced owing to the presence of gum and dirt; or, the piston packing-ring *18* is so worn that train-pipe air can pass by it into chamber *D*; or, the gasket *32* is leaking.

CARE OF ENGINEER'S VALVES.

68. General Remarks.—There is a wide range of variation in the time a rotary valve will continue working satisfactorily in general service. Some valves will run three, four, or six months, while others will not run as many weeks.

Tallow or *vaseline* are good lubricants for the rotary, but oil of any kind should be used sparingly on any part of the brake apparatus, except the steam end of the pump. Oil that has a tendency to gum should never be used.

Whenever the rotary valve works hard, the brake valve should be taken apart and the rotary cleaned and oiled, to prevent cutting. At the same time, the packing ring *18* should be cleaned, but without removing it, since, if removed, it is liable to be sprung out of true, which will necessitate refitting to the bushing in which it works. Also clean the stem and seat of the valve *E* thoroughly, but leave no oil on either, as it will catch particles of dirt and scale and cause trouble.

69. Rotary Working Hard.—The chief causes of a rotary working hard are: too free use of oil on the air end of the pump, or the use of poor oil; constant use of the emergency position of the valve, which tends to draw dirt and scale from the train line upon the rotary seat; a hot pump, the heat from which will cake the oil on the rotary seat; the nut *7*, Fig. 16 (*b*), or the corresponding nut in Fig. 14 (*a*), being screwed down so tight as to cause gasket *12* to bind on the top casing of the engineer's valve.

70. Cleaning the Feed-Valve Attachment.—In cleaning the feed-valve attachment of the F-6 valve, or the excess-pressure valve of the D-8 valve, remove all dirt and gum and clean the valve chambers thoroughly; then blow out, by turning the brake valve to running position. Any gum present should be softened, if possible, and wiped out instead of scraping out with a tool that is liable to scratch the valve seat. The packing ring *67* of the feed-valve piston *74* should be cleaned *without removing*, and then oiled a little. In putting the parts together, do not screw the nuts that fasten the rotary-valve handle too tight; and, in screwing the lower casing *69* of the feed-valve attachment on the F-6 valve, be sure that there is an opening of about $\frac{1}{32}$ of an inch between the upper and lower parts of governor body, since screwing the lower part up tight crushes the gasket, as already explained.

THE EQUALIZING RESERVOIR.

ITS IMPORTANCE.

71. The equalizing reservoir plays a very important part in the handling of the brakes in service applications. The duty of this reservoir, as explained in Art. **75**, Part 1, is to increase the capacity of chamber *D* in the brake valve an amount sufficient to enable small service reductions to be made, so as to apply the brakes gradually.

EFFECTS OF LEAKS.

72. Slight Leaks.—A slight leak in the equalizing reservoir or its connections constantly tends to reduce the pressure in chamber *D*; the effect of such a leak depends on the position of the brake-valve handle.

In full-release and running positions there would practically be no effect, aside from the fact that a little extra air would have to be supplied by the pump.

When the valve is moved to service position, the leak acts to help the reduction made by the engineer, and, consequently, a harder application of the brakes than is intended will be made.

When the valve is moved to lap position, the leak continues to reduce the pressure in chamber *D*; train-pipe pressure then raises the equalizing piston and escapes to the atmosphere, and this sets the brakes harder. A slight leak from the equalizing reservoir, therefore, causes a blow from the train-pipe exhaust valve when the brake valve is in lap position, and the longer the train pipe, the stronger the blow will be.

73. Bad Leaks.—A bad leak, such as would be produced by a split or broken pipe to the equalizing reservoir or air gauge, will allow chamber *D* pressure to escape entirely, and the train-pipe exhaust valve will be held open by train-pipe pressure until it has all escaped. This will result in a full application, or, in some cases, an emergency application of the

brakes. Such a leak, therefore, will render the brake system useless until it is stopped.

Leak in Equalizing Reservoir.—If the leak occurs in the equalizing reservoir, or in the pipe leading to it, place a blind gasket in the union at *T* of the brake valve, Figs. 14 and 16, plug the train-pipe exhaust elbow *25* (which is threaded for this purpose), and then use the brake valve carefully in emergency position (like the old three-way cock) in making service stops. In all other respects, the brake valve should be operated as usual, since placing the gasket and plug in the places mentioned does not affect its working in release, lap, running, or emergency positions.

Defective Gauge Pipe.—If the leak is due to a split or break in the pipe leading to the air gauge, the trouble may be remedied by putting a blind gasket in the union *W* of the brake valve. This will cut out the black hand of the gauge, but will not in any way affect the working of the brake valve.

It is an interesting experiment to put a blind gasket in the union *T*, where the pipe from the equalizing reservoir connects with the brake valve, and notice the effect of a service reduction when the engine is connected, first to a train of seven cars or less, and then to a train of considerably more than seven.

MAKING SERVICE STOPS FROM EMERGENCY POSITION.

74. Considerable care and judgment must be exercised in making service stops from emergency position. If the exhaust port is opened *too wide*, or opened or closed *too rapidly*, trouble is almost sure to follow. The exhaust port should be opened *very gradually* and just sufficiently wide to make, as nearly as possible, the usual train-pipe reduction; if opened wider, too great a reduction will be made and rough handling of passengers or freight will probably result.

Opening Exhaust Port Too Rapidly.—If the exhaust port is opened too wide or too rapidly, a quick reduction is made in the forward end of the train line, which may operate the emergency part of the triple—if it does not, it sets the front-end

brakes before the back-end ones; and the longer the train pipe, the greater this effect will be. This tends to retard the front cars, and the rear ones, which are not retarded, crash into them with great force if the train is very long, and damaged draft-rigging or freight is the result.

Closing Exhaust Port Too Rapidly.—If the exhaust port is closed too quickly, the forward brakes may be "kicked off." When once in motion, the long column of air in the train pipe cannot be stopped instantly; consequently, if the exhaust port is closed very rapidly, the air will continue to flow forwards after it is closed and may raise the pressure in the front end of the train pipe sufficiently to release or kick off the forward brakes. If the exhaust port is closed so quickly that the train-pipe pressure is not equalized the whole length, the triple valves on the front end will equalize the auxiliaries and train pipe at a lower pressure than on the rear cars, and, when the train-pipe pressure finally equalizes the whole length, the pressure in the train pipe on the head cars will be greater than in the auxiliaries on those cars, thus causing the triples to move to release position and release some of the head brakes.

THE AIR BRAKE.

(PART 3.)

OPERATING AND TESTING.

THE MAKE-UP OF A TRAIN.

1. The smoothness and ease with which a freight train can be handled, as well as the facility with which it can be stopped by means of the air brake, depends, to a considerable extent, on the way the train is **made up.** The make-up of a passenger train, on the other hand, affects the handling of the train so very slightly that, so far as the braking is concerned, no particular attention need be paid to it.

GENERAL CONSIDERATIONS.

2. The conditions of braking on passenger and freight trains differ greatly. On a passenger train there is no free **slack** between cars to bother us; both the load and the braking power are distributed quite uniformly throughout the length of the train; the brakes are kept in good condition and the piston travel maintained within proper limits; train-pipe, auxiliary, and brake-cylinder leakage is very slight; and the length of the train pipe is such that, practically, the brakes set simultaneously on all parts of the train.

With a freight train, on the other hand, there is a great deal of slack, which must be handled properly to avoid severe shocks; the load is generally distributed unevenly throughout the train; the brakes generally do not receive sufficient attention

to keep them in as good condition as those on a passenger train; and the brake-piston travel is seldom uniform. Consequently, the braking force, even on an all-air train, is not uniform throughout its length; the leakage in the brake system is greater in freight than in passenger service; and, lastly, the train pipe on a freight train is generally so long that the retarding effect of friction on the flow of air through it is sufficient to cause an appreciable interval of time to elapse between the operation of the first and last brakes. The increased diameter of the freight-car train pipe helps this last trouble in a measure.

3. Effects of Slack.—There is always a great deal of free slack in a freight train, and it must be handled with great care or else severe shocks will result, which may injure both drawbars and freight. The slack is less troublesome on all-air than on part-air trains, since in the former each car is equipped with the air brake, which permits of the retarding force being applied to, or removed from, each car at nearly the same instant; the slack, therefore, cannot gather or run out quickly, and shocks when they occur are less severe. However, a large number of freight trains are in operation that have only a part of the cars equipped with air brakes, and with these the effect of slack is most severe.

The engineer has more or less direct control over the slack that is between the **air cars,** but he has no control over that between the **non-air cars;** consequently, the free slack back of the air cars must be "taken up" every time the brakes are applied, and be run out at every release. Whether a shock will occur either in "bunching" or "stretching" a train, depends on how quickly it is accomplished. If the first service reduction is made sufficiently heavy to bunch the train quickly, the last cars will run up against the others with great force; and the heavier the last cars are loaded, the greater will be the shock and consequent damage. On the other hand, the lighter the rear cars, the less the shock will be; hence, a part-air train can be handled more easily and with less chance of damage to freight if the heavily loaded cars are placed next to the air cars, and the less heavily loaded ones and empties next to the way car.

4. Effects of Unevenly Distributed Load.—When a freight train is made up of both loaded and empty cars, and the loaded cars are distributed haphazard throughout the train, the load is said to be *distributed unevenly.* Since it is harder both to start and stop loaded cars, shocks of a more or less serious nature occur at different points of the train every time it is started, stopped, or has its speed retarded suddenly. This trouble can be avoided by placing all loaded cars together at the head end of the train.

5. Effects of Unequal Piston Travel.—To effect smooth handling of freight trains by means of the air brake, it is essential that the travel of the brake-cylinder pistons be kept within the proper limits. If the **piston travel** on some of the cars in a train is too short, while on others it is too long, shocks will occur at a number of points in the train every time the brakes are applied or released. This is due to the fact that the brake cylinders having a short piston travel apply their brakes harder at each reduction and equalize with their auxiliaries sooner, and at a higher pressure, than those having a long piston travel; also, they release later than the long-travel brakes. This causes the slack to be gathered at some parts of the train, and to run out at others, every time the brakes are applied or released, producing a surging of the cars that results in shocks, which make smooth handling of the train difficult.

6. Effects of Length of Train Pipe.—The **length of train pipe** also has considerable influence on the ease with which the train can be handled. Frictional resistance tends to retard the flow of air through the train pipe, and the longer the train pipe the more troublesome this retarding effect becomes. When conditions are normal, the retarding effect is such that in making an ordinary service reduction on a fifty-car air freight train, the pressure in the head end of the train pipe is reduced about 6 pounds before the reduction begins to be felt at the rear end; while, on releasing brakes on such a train, there may be a difference of pressure of about 10 or 12 pounds between the

two ends, the pressure at the head end being the higher. This difference of pressure causes the head-end brakes to both apply and release sooner than the rear-end ones, with the result that, on a long train, some severe shocks will be produced if the brakes are not handled with skill and judgment.

MAKING UP FREIGHT TRAINS.

ALL-AIR TRAIN.

7. **All-air trains** can be handled much more smoothly and satisfactorily if all the loaded cars are placed next to the engine, and the empties next to the way car. Also, when the cars are mostly equipped with quick-action triples, care should be taken not to place two or three cars together that either have plain triples, or have their brakes cut out, or are merely piped, since, in cases of emergency, it will be impossible to obtain the quick action of the triples back of them.

PART-AIR TRAIN.

8. In making up a **part-air train,** all the air cars, whether loaded or empty, should be placed together at the head end of the train and cut into service. Every air brake possible should be employed in braking, since the more in use the more smoothly the train can be handled; besides, they may be needed to make a quick stop in an emergency. Do not place together three or four cars with plain triples, or with brakes cut out, if most of the cars have quick-action triples, but distribute them among the quick-action cars. As to the non-air cars, the best results will be obtained if they can be so arranged that the loaded ones are next to the air cars and ahead of the empties. Empty non-air flat cars are liable to be damaged if placed ahead of loads next to the air cars; they should come next to rear end.

TESTING BRAKES.

ENGINE EQUIPMENT.

9. The Air Pump.—Any defects in the engine air-brake or signal apparatus should be reported at the end of the trip, so that the necessary repairs can be made before the engine is again called into service. If necessary, tests should be made to locate the defects.

The air pump should be tested under its usual head of steam, as follows: With the pump running at normal speed, note the time at intervals of 10 pounds, while the main-reservoir pressure is being raised from 40 to 90 pounds. If the pressure is pumped in the usual time, during which the pump shows no sign of disorder, the presumption is that it is in good condition and no further tests will be necessary. If, on the other hand, the test shows that the pump is not in its normal condition, the trouble may be due to leaky piston packing-rings, to leaky receiving valves, to back leakage from main reservoir, or to the air valves being stuck. Tests, as in Art. **13**, Part 2, should be made to locate the cause.

10. The Pump Governor.—The governor should be tested to see whether standard pressure is obtained when it stops the pump; also, to see whether it will start the pump promptly when a light reduction of not more than 2 pounds is made in the pressure that operates the governor (see Art. **28**, Part 1). If the pump stops either before or after standard pressure is obtained, the governor should be adjusted, by means of the regulating nut *40*, until it regulates the pump properly (see Art. **57**, Part 2). If the governor does not start the pump promptly when a slight reduction is made, it may be due to a leaky pin valve, to the relief port *c* being stopped up, or (in governors not having this relief port) to the governor piston packing rings being too tight (see Art. **2**, Part 2).

11. The Brake Valve.—The brake valve should first be tested for leaks from main reservoir into the train pipe. In the D-8 valve this would occur past the rotary valve, so that a test

for a leaky rotary should be made by one of the methods given in Art. **45**, Part 2. In the F-6 valve, the leak may occur either past the rotary valve or the gasket *32*. Tests for these defects are given in Arts. **60** and **61**, Part 2. Next, if the valve is of the D-8 type, the excess-pressure spring should be tested to ascertain if it is of the proper resistance, as in Art. **43**, Part 2; or, if the valve is of the F-6 type, test the tension of the regulating spring *68* in the feed-valve, as in Art. **58**, Part 2. Then, if a D-8 valve, test for a leak past the excess-pressure valve, Art. **49**, Part 2; or, if an F-6 valve, test for a leaky supply valve and leaky feed-valve case gasket, Arts. **62** and **65**, Part 2.

Next make a service reduction of 20 pounds in chamber *D*, and note the time required for the reduction. If it takes longer than 5 seconds, the indications are that the size of the passage in the preliminary-exhaust port is reduced; or the piston packing-ring is worn; or, in the F-6 valve, the gasket *32* is leaking (see Arts. **53** and **67**, Part 2). If the reduction is made in much less time than 5 seconds, it indicates either that the equalizing reservoir leaks, or that there is water in it. For a test for leaks in the equalizing reservoir, see Art. **72**, Part 2.

12. Driver and Tender Brakes.—An air gauge should be attached to the driver- and tender-brake cylinders at least once a month, to ascertain the condition of the piston packing leathers. After the auxiliaries are fully charged, make a 35- or 40-pound service reduction, lap the valve, and note the pressure at which the auxiliary and brake cylinders equalize. Also, note the pressure at the end of 5 minutes; if it does not decrease more than 5 or 6 pounds during that time, the brake cylinder is in good condition. If the gauge shows that the brake-cylinder pressure decreases at a considerably greater rate, examine the packing leathers and look for leaks in the cylinder connections, the gasket between the cylinder and head, and the piston-rod packing.

If the driver-brake cylinder is in such a position that it is subjected to considerable heat, it should be oiled sufficiently often to keep the packing leather soft and pliable. It is poor practice to use water to soften the packing leather, since it dries

out very quickly and the leather then becomes harder and is much more liable to crack.

Driver Brake Fails to Apply.—If the driver brake fails to apply, first see whether the handle of the cut-out cock is turned so as to cut out the brake. The brake being cut in, open the release cock on the auxiliary to see whether it is charged. If the discharge indicates that the auxiliary is charged, it may be that the triple piston, being badly gummed, is stuck in the release position, or that its packing ring is badly worn. In either case, when a reduction is made, the auxiliary may equalize with the train pipe through the feed groove and past the packing ring so fast that the piston is not moved out. In case the triple piston is stuck, one or two sudden heavy reductions should loosen it. If the cause cannot be located, take down the triple and examine it. Also, examine the brake-cylinder packing leathers, as a leak there is a cause for failure to apply.

Driver Brake Fails to Release.—This may be due to a worn piston packing-ring in the triple valve, aided by dirt and gum, the leakage past the packing ring allowing auxiliary pressure to equalize with the train line without moving the triple piston; or the triple exhaust port may be stopped up; or the release spring in the brake cylinder may be weak or broken; or, in the cam brake, the piston travel may be so long that the brakes lock against the drivers. In the latter event, the cams must be pried until the brake releases. In the event of the brake being stuck, try to release it by making a heavy reduction and then quickly placing the brake valve in full-release position.

Driver Brake Releases.—If the driver brakes release soon after being applied, it may be due to a leak in the auxiliary reservoir or its connections, to a leaky graduating valve in the triple valve, or to a leak in the piston packing leather or piston-rod packing. See also, Art. **74**, Part 2.

13. Triple Valves.—Plain triples are used on the engine and tender; therefore, if a blow occurs at the exhaust port of either triple, look for a leaky slide valve *3*, or for a leak past the plug cock *13* into port *f*, Fig. 7, Part 1. To determine which of

these is causing the blow, apply the brake lightly; this causes the slide valve to close communication between port *f* and the exhaust port *k*, and if the trouble is due to a leaky plug cock, the blow will cease, while if due to a leaky slide valve, it will continue.

The method of testing the air-signal system for defects will be given after the signal system has been explained.

TERMINAL TEST OF TRAIN.

14. General Instructions.—If possible, all the air cars should be coupled up and the brakes cut in before the engine is connected to the train, as both time and air can be saved by so doing.

On taking his engine, the engineer should start his pump and run it slowly until sufficient pressure is accumulated in the main reservoir to properly cushion the pump; he should then increase its speed and pump up the proper main-reservoir pressure. Also, he should carefully inspect the air-brake apparatus on both the engine and tender, to assure himself that all necessary repairs have been made, and that everything is in perfect working order. The train pipe on the engine should be blown out to get rid of any dirt and water there may be in it before the engine is coupled to the train. The brake valve should be carried in lap position* while the engine is being coupled to the train. After coupling the hose between engine and tender, the tender angle cock should be opened first, so that the hose will be charged when the car angle cock is opened. If the car angle cock is opened first and the train is short and equipped with quick-action triples, the brakes are liable to apply quick-action, due to the sudden reduction caused by train-pipe air expanding to fill the empty hose. The angle cocks should always be opened slowly, since, if the handle is turned quickly, emergency action may result.

*There is considerable difference of opinion as to the position in which the valve should be carried when coupling to the train, but the consensus of opinion seems to favor lap position.

During the time the train is being charged, the inspector, or trainman, should pass along and examine each car for leaks and other defects. It should be observed whether all of the angle cocks are open, except the last one on the rear air-braked car; whether the cock in each branch pipe is open so that all of the cars, except those that are not in good condition, are cut in; whether the hand-brakes are fully released; and, if the retainers are to be used, whether the retainer handles are turned up.

After the train has been fully charged to standard pressure, the brake system should be tested. If time will permit, 70 pounds pressure should always be obtained before this test is made; but in no case should it be made with less than 60 pounds for passenger trains or 50 pounds for freight trains. When the train is fully charged, it will be indicated by the pump slowing up.

To make the test, a service reduction of from 5 to 7 pounds, or one just sufficient to move the brake pistons out past the leakage grooves, should be made, and the brake valve lapped. The engineer should then watch the air gauge to ascertain the extent of train-pipe leaks, since they will be indicated by the black* hand falling. A sufficient number of moderate service reductions should then be made to produce a 20-pound train-pipe reduction, and the brakes should then be held on while the train is inspected to see whether all brakes set or whether any of them leak off after being set; also, the length of the piston travel on each car should be examined. After the entire train has been inspected, the engineer should be signaled to release brakes, and, if the train is equipped with the air-signal system, the signal should be given from the rear car to make sure that the air signal is connected up and working properly. The engineer should then release the brakes, and, if the retainers were not in use, the train should again be inspected to see whether all brakes release properly and whether there is a blow at the exhaust port of any of the triple valves. If the retainer handles were turned up during the test, the inspector or brakeman should go over the train after the engineer has released, and

* The train-line hand on the new semaphore gauge is *white.*

turn the retainer handles down, noting, as he turns each down, whether the brake releases, and whether a blow occurs at retainer after brake has released. If air discharges from the retainer as the handle is turned down, the retainer is working properly. After the test, a report should be made to both the engineer and conductor, showing the total number of air and non-air cars in the train; the number of air cars in good working order and the number cut out; the condition of the piston travel; the number of retainers, if they are to be used, that are working properly; and also, the general condition of the train.

In making the first service reduction in testing the brakes, the engineer should note the *length of time* the train-pipe exhaust blows, as by making a practice of so doing, he soon will be able to judge of the length of train pipe that is cut in, and thus, in many instances, can detect an angle cock that has been left closed. He should also note if the sound of the train-pipe exhaust is full and continuous, or strong at first and then stringing out weak for some seconds; a little practice will teach him to distinguish the effect of a partly opened angle cock or a stoppage in the train pipe.

15. Brake Fails to Apply.—If, during the inspection, a brake is found that **will not set,** first make sure that it is cut in, and then try the bleed cock on the auxiliary reservoir, to ascertain whether the reservoir has been charged. If the auxiliary is not charged, and there is sufficient time at disposal, take the triple down and look for a stopped-up feed groove. If air issues freely from the bleed cock, it may be that the feed groove was only partially stopped up, resulting in the auxiliary being charged insufficiently to set the brake when the test was made. If the trouble cannot be remedied at the time, cut out the brake by closing the cut-out cock in the branch pipe leading to the triple.

16. Brake Releases.—If a certain brake **will not stay on,** but releases as soon as it is set, the trouble is due to a heavy leak either from the brake cylinder or from the auxiliary reservoir. If the leak is from the auxiliary, the triple valve will move to release position, and air from the brake cylinder

will come out of the exhaust. If the leak is in the brake cylinder only, the triple valve will not move. The leak from the brake cylinder may occur through the leakage groove or past the piston in the brake cylinder. The hand-brake may be partly set, or the slack in the brake may be taken up so short that the brake-cylinder piston cannot move out far enough to cover the leakage groove, in which case the brake will either not set, or will release at once. The leak past the brake-cylinder piston may be due to a dried-out packing leather, or to the expander ring being out of place.

Leaks from the auxiliary reservoir may occur through a defect in the release valve (Art. **34**, Part 2) or through the triple exhaust port (Arts. **25** and **27**, Part 2). If at the release valve, look for a bent valve rod or for dirt on the valve seat. A leak due to the former may be remedied by straightening the valve rod; that due to the latter can in some cases be remedied by quickly jerking the release valve open two or three times. If the leak cannot be stopped, the brake must be cut out.

17. Brake Fails to Release.—If a brake **fails to release**, and there is a strong blow at the exhaust port of the triple valve, the trouble is caused by a bad leak past the rubber seat of the emergency valve, or else the valve is stuck open (see Art. **27**, Part 2). In either case, train-pipe air enters the brake cylinder at a faster rate than brake-cylinder air can escape through the exhaust port, and consequently pressure accumulates in the cylinder and holds the brake on. If the trouble does not cease when the triple is jarred lightly with a piece of wood, make a quick, heavy reduction, and then release; if this does not prove effective, cut out the brake by closing the cut-out cock, drain the auxiliary reservoir by means of the release valve, and then cut the brake in suddenly. If the blow still continues, cut the brake out of service.

If, when the brake refuses to release, there is no blow at the triple exhaust, first see if the handle of the retainer on that car is turned down, and, if so, whether the retainer exhaust port is stopped up. A certain kind of wasp has been known, in some

localities, to build its nest in the retainer and thus plug it up. The retainer being all right, see whether the hand-brake is fully released; whether the slack has been taken up too tight; or whether the brake has released, but the spring in the brake cylinder been unable to move the brake piston to release position. If the trouble is not in any of these places, it is pretty sure to be due to a badly worn packing ring in the triple piston.

Testing Triple Piston.—The condition of the triple piston packing ring can be determined as follows: Apply the brake by making a 10- or 12-pound reduction, and then gradually open the release valve on the auxiliary of the defective brake a very small amount, so that a slight discharge takes place through it. If the brake does not release within 10 or 15 seconds, gradually open the release valve a little wider, so as to increase the rate of discharge. Continue to increase the discharge every 10 or 15 seconds until the brake releases; then the rate at which air is escaping through the release valve will be a measure of the rate at which train-pipe air escapes past the triple piston packing ring. The escape of air through the release valve, however, must be slightly greater than that past the packing ring, as otherwise a sufficient auxiliary reduction could not be obtained to release the brake. When the packing ring is worn, a rather quick, heavy reduction of auxiliary pressure is necessary to move the triple to release position; in such a case, therefore, the brakes are more liable to stick on a long, than on a short, train.

If the engineer finds that some of the brakes have a tendency to stick, he should carry the full amount of excess pressure all the time, and, at places where a heavy application must be made, he should have a high main-reservoir pressure to insure a prompt release.

18. Train-Pipe Leaks.—In inspecting a train for leaks, the parts to be inspected may be divided into: (1) the train pipe and its branch pipes; (2) the hose and couplings; (3) the triple valves; (4) the auxiliary reservoir; and (5) the brake cylinder.

1. *The Train Pipe and Branch Pipes.*—Leaks in the train pipe may occur at any of the joints. If at the union joint at the car drain cup, it can sometimes be stopped by tightening that joint; if not, a new gasket must be used. When the leak occurs at the joint where the branch pipe screws into the car drain cup, or in the joints at the stop-cock in the branch pipe, it can sometimes be stopped by disconnecting the branch pipe at the triple valve and turning the pipe until the leak ceases. If the leak occurs in the union at the triple, it may be stopped by tightening the union joint or by replacing the union gasket.

The leak may be due to a split or break in the train pipe. In that case, switch the car behind all of the air cars and couple its hose to that of the last air car; then close the front angle cock on the defective car and open the rear one on the car ahead, so that the hose will be included in the train pipe. Then, should the train part between the defective car and the last air car, the brakes will be applied.

2. *The Hose and Couplings.*—In looking for leaks in an air-brake hose, not only the hose but also the couplings and nipples should be examined. The hose itself may be porous, in which case the air escapes so silently and in such finely divided streams that it is very liable to be overlooked, especially as the hose may have the appearance of being perfectly sound. In some cases, such a hose can be detected by bringing a lighted torch near it, or by wetting the hand and moving it over the hose, the escaping air making the hand feel cooler. The best method, however, is to apply a little soap and water by means of a sponge or piece of waste; the escaping air will be indicated by the formation of bubbles. Such a hose, when located, should be removed and marked "defective," a sound hose being put in to replace it.

Leakage at the hose coupling may occur past the gaskets *2*, or under the hose clamps *c*, Fig. 11, Part 1. If in the gaskets, close the angle cocks on either side of the hose, separate it, and if the gaskets have been distorted out of shape, straighten them out and try them again. If they still leak, new gaskets should be used. If none are at hand, separate the couplings and put a match or small sliver of wood back of each lug and again unite

the couplings. This will force the gaskets closer together, and will probably stop the leak. Sometimes the manner in which frozen couplings are parted is the cause of trouble with coupling gaskets. **Frozen couplings** should always be thawed out before an attempt is made to part them, as otherwise the gaskets are almost sure to be ruined. Paper should never be used between the hose gaskets to stop a leak, as it is very liable to work into the brake system and cause trouble. If the leak is under the hose clamp *c* and cannot be remedied by tightening the clamp, a new hose must be substituted.

Leakage at the hose nipple may be due to the nipple not being screwed into the angle cock tight enough, or the leak may occur under the nipple hose clamp. If the former, screw up the nipple until it makes a tight joint; if the latter, tighten the clamp, and if this does not stop the leak, change the hose.

3. *The Triple Valves.*—A blow at the triple exhaust port may be due to a leak either from the train line or from the auxiliary reservoir. To test for the source of the blow, close the stop-cock in the branch pipe so as to cut out the brake: if the leak is from the train line, the brake will set; if from the auxiliary reservoir, it will not. The exhaust port of the triple valve or of the pressure retainer must never be plugged up on account of a blow occurring at either place, for the reason that it would then be impossible to release the brake on that car.

4. *The Auxiliary Reservoir.*—Leakage from the auxiliary reservoir may occur through either the release valve or the triple exhaust port, as already mentioned.

5. *The Brake Cylinder.*—Brake-cylinder leakage was discussed in Art. **35**, Part 2. If the leakage is very great, the brake should be cut out of service.

19. Cutting Out a Brake.—When, on account of some defect in the apparatus, it becomes absolutely necessary to cut a brake out of service, proceed as follows: If a quick-action brake, close the cut-out cock in the branch pipe of the triple valve; if a plain triple is used, first release the brake so that the brake piston moves back and uncovers the leakage groove, turn the handle *15* (Fig. 7, Part 1) to the position *15′*, that is,

midway between the horizontal and vertical positions. The release valve of the auxiliary reservoir must then be opened and secured in that position, if a freight car, so that the reservoir will be relieved of all pressure; otherwise the brake is liable to set and cause trouble. Never attempt to cut out a brake by closing the angle cocks at the ends of the car, as that will not only cut out the brake on that car, but on all others back of it, since closing an angle cock cuts off the train pipe back of it.

20. Cutting Out a Car.—A brake is cut out by closing the stop-cock in the branch pipe. A car is cut out by closing the angle cocks at each end of the car, the release valve being opened the same as when a brake is cut out. After a car has been cut out, it should be switched to the rear of the air cars, and its front hose coupled into the train pipe for the reasons just given in Art. **18**, 1.

RUNNING TEST.

21. A **running test** of the brakes should be made on all trains when leaving the terminal station, to make sure that the brakes set and release properly throughout the train. A running test should also be made when, for any reason, a train is parted during the run.

The engine throttle valve is kept open while this test is being made, the engineer simply making a light service reduction to see whether, and how well, the brakes take hold. As soon as he feels them take hold properly, he releases. While making the reduction, the engineer should note the length of time the train pipe exhausts, since by so doing he can judge of the length of the train pipe that is cut into service.

TEMPERATURE TEST.

22. It is well known that the holding power of the brakes varies greatly on different cars, due to defects in the brake system. It is well known, also, that if a brake is applied to a revolving wheel for any length of time, the wheel will become heated; and the longer the brake is held on, or the greater the

retarding force exerted by it, the greater will be the resulting temperature of the wheel. Of course, the brakes on a train are all applied at the same time, so that if they held equally well the wheels would be of a uniform temperature throughout the train, and no information could result from a test of the wheel temperature. It will be found, however, that the wheels heat unequally, some being much hotter and others much cooler than the average. If the brakes on the wheels of average temperature are assumed to be doing their proper share of work, those on the wheels of higher temperature must, for some reason, be doing more than their share, while those on the wheels of lower temperature must be doing less than their share; hence, a test and record of the temperature of the wheels of a train, after the brakes have been applied for some time—as in descending a long grade—will give some very interesting and useful information as to the condition and relative holding power of the brakes on different cars. The record should be such that it will show clearly which brakes require attention, and therefore should contain a statement of the number of each car on which the temperature of the wheels is very much above or below the average, and whether the wheels are too hot or too cold.

23. Locating Defects.—Having, then, a record of the defective brakes, stating the comparative temperatures of the wheels, it remains to locate and remedy the defect that causes the trouble.

If the wheels on a certain car are *too hot*, it indicates either that the brake on that car holds better than the other brakes or else it did not fully release with the others, and, consequently, had been dragging. Hence, the piston travel on that car should be measured to see whether it is too short, and the hand-brake inspected to see whether it is fully released. Also, inspect the pressure retainer to see whether it is working properly, and the brake cylinder to see whether the piston is stuck out, due to a defect in the cylinder or brake rigging. The brake may have been held on, due to a leak from the train pipe into the cylinder past the emergency valve, but this would be at once detected by a blow at the triple exhaust port.

If the wheels are *too cold*, it indicates either that the brake, for some reason, did not hold as well as the others, or did not apply with the others, or else that it released soon after it was set. The brake-piston travel, therefore, should be measured to see whether it is too long—in which case the force exerted by the brake would be considerably less than with the proper piston travel; or whether it is too short—in which case it is possible that the brake piston does not cover the leakage groove, the brake leaking off as a result. Also, the brake may not have applied at all, as the cut-out cock may not have been opened; or else it may have released again, due to leakage in the brake cylinder, auxiliary reservoir, triple valve, or—when the brakes have been released and the retainer is supposed to be holding 15 pounds in the brake cylinder—in the pipe leading to the retaining valve.

On roads where there are long down grades on which the retainers must be used, the wheel-temperature test is especially essential. When the brakes are held on for a considerable length of time, some of the wheels are liable to become very hot, and since the heating takes place at the rim, the wheel is subjected to stresses that are liable to cause it to break.

HANDLING TRAINS.

SERVICE STOPS.

24. General Considerations.—In making a service application of the brakes, the amount of the first reduction will depend somewhat on the length of the train. Whatever the length of the train pipe, the first reduction must be sufficient to cause the brake-cylinder pistons to move out far enough to cover the leakage grooves; otherwise, the brake will not set, and the air that should have been used in setting it will pass out through the leakage groove and be wasted. If too heavy a reduction is made, the slack of the train (if a freight) will run in so quickly that a severe shock will result.

The amount of reduction necessary to cover the leakage grooves can readily be determined when testing the train or when making the first stops. In passenger service, from 5 to 7 pounds is generally sufficient for the first reduction. With a freight train consisting of, or controlled by, ten air cars, a reduction of from 5 to 7 pounds will give good results. When the train contains more than this number of air cars, the reduction must be increased accordingly. For example, a train containing twenty-five air cars will probably require an 8-pound initial reduction, while a train of fifty or sixty air cars may require a 10-pound reduction.

25. The First Reduction.—There are several reasons why a **heavier first reduction** is necessary with a long train than with a short one. Of course, since the volume of air contained in the equalizing reservoir is constant, regardless of the length of the train line, a reduction of chamber *D* pressure (of any given amount) can always be made in practically the same time. The volume of air in the train line, on the other hand, increases directly with its length, so that the longer it is, the more time is required to make a given reduction in the train-pipe pressure. Now, since train-pipe pressure reduces more slowly on a long train than on a short one, there is a greater chance for auxiliary pressure to feed back into the train pipe through the feed groove before it is closed by the triple piston. This reduces auxiliary pressure and has the same effect as though the first reduction had been lighter. Then again, the slower the train-pipe pressure is reduced, the slower will the auxiliary pressure feed into the brake cylinder, and, consequently, the more air will leak out of the leakage groove and past the packing leather.

The amount of the reduction depends, also, on the fit of the equalizing piston packing ring in the brake valve. This ring never makes an air-tight fit, and in some cases considerable air can leak by it. Now, when the train is long, a reduction can be made several seconds sooner in chamber *D* and the equalizing reservoir than in the train pipe; hence, chamber *D* pressure may be less than train-pipe pressure for several seconds during

a service reduction. In consequence of this, air will leak back from the train pipe into chamber *D* and raise chamber *D* pressure, and the longer it takes for the train pipe to reduce, or the more the piston packing-ring leaks, the more will chamber *D* pressure be raised. Thus, what is intended for a 6- or 7-pound train-pipe reduction may result in only a 4- or 5-pound reduction, and in order to get the 6- or 7-pound train-pipe reduction in such a case, a reduction of 8 or 9 pounds may be necessary.

26. Reductions Following.—The amount of the reductions **after the first reduction** depends somewhat on the length of the train pipe and the condition of the brake apparatus. With the apparatus in good condition the reductions should not, as a rule, be more than from 2 to 6 pounds, being small when the train pipe is short, and increasing as the length of the train pipe increases.

Experiment has shown that a brake grips the wheel better, and, consequently, retards the train more, at slow than at fast speeds for the same train-pipe reduction; therefore, the danger of producing shocks is greatest at slow speeds, and the reductions should be made accordingly. Also, sufficient time must elapse between reductions to allow all of the brakes to set and the slack to equalize throughout the train. If the reductions are made too close together, the effect will be the same as though one heavy reduction had been made. For example, if one 3-pound reduction is followed by another before the train-pipe exhaust ceases, the brakes will set as though a 6-pound reduction had been made. It must be remembered that the graduating valve in the triple valve does not close until the train-pipe exhaust ceases, regardless of when the preliminary exhaust stops, and any reduction made before it closes will prevent that event taking place until auxiliary pressure is reduced an amount equal to the sum of the reductions.

27. Number of Reductions.—The **number of reductions** to be made in a service application depends on circumstances. It is not good practice to wait so long before applying the brakes that a sufficient number of heavy reductions must be made to cause a full application, in order to make the stop

at the proper spot. It is better to make the first reduction at such a distance from the stopping point that a full application of the brakes will not be necessary. The reductions should be moderate and sufficient in number to make not more than a 15-pound train-pipe reduction in bringing the train to a standstill. The engineer then has at his command a reserve braking force that will be of the greatest value in case of emergency while running into a station.

28. Passenger-Train Stops.—An ordinary **station stop** with a passenger train is generally made with one application of the brakes, and in no case should more than two applications be necessary. A 5- or 6-pound reduction should be made at the proper distance from the stopping point, and this should be followed by a sufficient number of 2- or 3-pound reductions to bring the train to rest gradually at the proper point. The brakes should be released just before the train stops, so that the car trucks can right themselves while it is still in motion. If this precaution is not taken, there will be an unpleasant lurch backwards just as the train stops.

Stops on Grades.—In making a **stop on a grade** where the brakes must be held on, it is best to use two applications of the brakes. The first application should be made as though the train were to be stopped a little short of the actual stopping point; then release the brakes (without recharging at all) when two to four car lengths from the stopping point, according to conditions. As soon as the car trucks right themselves, apply the brakes again lightly and leave them on. A light application, such as would be made in a case of this kind, does not tilt the trucks much; consequently, no surge is felt as the train stops. On some roads, all service stops with passenger trains are made with two applications of the brakes, and such practice gives good results.

Overcharging Train Pipe.—In releasing the first application preparatory to making the second, when stopping a train, the brake valve should be thrown to full release and then immediately moved to lap position, as otherwise the train pipe will be **overcharged.** The aim should be to just raise the train-pipe

pressure sufficiently to release the brakes without trying to recharge the auxiliaries any. The feed groove in the triples is small, and if the brake valve is left in release position so long that the train pipe is charged 15 or 20 pounds higher than the auxiliaries, these latter may not have time to equalize with the train pipe before the second application has to be made. Suppose that the train-pipe pressure is 6 or 7 pounds higher than the auxiliary pressure when the second application is about to be made: to set the brake with the first reduction, the engineer must make a 12- or 13-pound reduction—6 or 7 pounds to make the train pipe equal to the auxiliary pressure, and a further reduction of 5 or 6 pounds to apply the brakes. If the engineer makes the ordinary reduction, the brake will not apply, and the train will either run past the stopping point, or else the engineer will have to make an emergency application, which will, when the train is running slowly, cause a very disagreeable lurch. The easiest way to avoid this is not to overcharge the train pipe when releasing the brakes.

Number of Applications.—It is not good practice to make **more than two** applications of the brake in stopping a train. Every time the brakes are applied and released, the amount of air taken into the brake cylinder from the auxiliary is discharged into the atmosphere. This reduces the auxiliary pressure, so that on the second application it equalizes with the brake cylinder at a much lower pressure than on the first, while on the third application it equalizes at a very greatly reduced pressure. For example, if a brake is adjusted so that it will equalize with the auxiliary at about 50 pounds on the first reduction, it will equalize at about 30 pounds on the second, 20 pounds on the third, and at only about 10 or 12 pounds on the fourth application. It will thus be seen that the power of the brake falls away very rapidly with each reduction; hence, the advisability of making but two reductions at the most.

As already stated, two applications are advisable when making a stop on a grade. It will be found advisable, also, to make two applications whenever a close accurate stop is to be made, such as at water tanks or coal chutes. In each instance

the stop should be made according to the instructions just given for a stop on a grade, and the brakes should be held on until the water or coal has been taken.

Holding Brakes On.—When the brakes are to be **held on** for any length of time, and the engineer's valve is of the D-8 type, it will be necessary to stop the pump when main-reservoir pressure is obtained; otherwise, it would continue to work and overcharge the main reservoir. This in turn would overcharge the train pipe as soon as the brake valve was placed in release or running position, skidded wheels would probably result, and any old or weak hose would be very likely to burst.

Stopping by Means of Tail Hose.—When the train is to be backed some distance and stopped by one of the train hands by means of the **tail hose,** the engineer should carry his brake valve in running position until he is given a signal or feels the first application, when he should immediately place the brake valve on lap. During the run backwards the brake valve must, of course, be carried in running position to supply any train-line leaks, but it should be lapped in time so that the man making the stop will not be hampered and will have complete control of the train, since he is the man that is responsible for the way the stop is made.

29. Part-Air Freight Trains.—The amount of free slack in a part-air train is principally what makes such a train so difficult to handle without producing shocks, and, every time the speed of the train is altered, this slack must be taken care of. As already remarked, this free slack must either be gathered in or run out every time the speed of the train is changed, and the more quickly this is accomplished, the greater will be the resulting shock. Also, as remarked in Art. **3,** the extent of the shock will depend on the number and position of the loaded cars in the non-air section, and on the extent to which the air section resists the blow as the slack is bunched or run out. If there is a sufficient number of air cars to hold well and the loads are at the rear end of the train, the shock will be severe if the slack is bunched quickly; consequently, a train should always be bunched or stretched gradually.

In making a service stop with a part-air train, close the throttle at a sufficient distance from the stopping point, and let the train drift for a short distance, or until it has bunched fairly well. A reduction just sufficient to close the leakage grooves should then be made, and ample time allowed for any slack to run in before a second reduction is made. The second and succeeding reductions should be sufficiently light and numerous to bring the train smoothly and gradually to rest at the proper point, care being taken that one reduction is not made until after the train-pipe exhaust of the previous one has ceased.

As a rule, the brakes should be held on until the train has come to rest, as otherwise a shock tending to tear the train in two will be caused, due to the slack running out. They should be released immediately after stopping, however, so that the brakes on the air cars may not be rigidly set when the non-air cars run back—as they will do when the spring slack eases up.

Use of Hand-Brakes.—It should not be necessary to use hand-brakes to assist the air brakes in making a service stop, but in case this has to be done, the brakes immediately back of the air cars should be used, and not those at the rear end of the train. When hand-brakes are used, they should be released before the air brakes, as otherwise a break-in-two is liable to occur. In backing a part-air train out of a siding, however, a few hand-brakes should be applied at the rear end of the train before the air brakes are applied, so that the slack of the non-air section will not run out violently when the air brakes are applied to stop the train.

Water-Tank and Coal-Chute Stops.—It is a very difficult matter to apply or release the brakes of either a part-air or an all-air freight train at slow speeds, without a more or less severe shock resulting; hence, the safest way to make a close, accurate stop with a freight train is to stop short of the tank or chute, cut the engine off, take coal or water, and then couple up to the train again.

A good way to make an accurate stop with a "lone" engine is to apply the brake in such a way that it will tend to stop 3 or 4 feet short; then, without releasing, use

a little steam just before it ceases to move, and the instant the throttle is closed the engine will stop.

30. All-Air Freight Trains.—Although in making stops with an all-air train the engineer does not have to deal with a lot of free slack, as in the case of a part-air train, yet if the train is very long, he will have trouble with slack, since the head-end brakes apply and release sooner than the rear ones, in consequence of which, the slack plays in or out when the first reduction is made or the brakes are released. Also, as stated in Arts. **4** and **5**, uneven distribution of load and unequal travel of the brake pistons complicate matters so that good judgment and skill must be exercised in handling such a train or else rough treatment of freight is sure to follow. Both the first and succeeding reductions must be heavier (according to the length of the train) than for short freight or for passenger trains (see Arts. **28** and **29**). The first should be sufficient to cover all of the leakage grooves, and no succeeding reduction should be made before the train-pipe exhaust, due to the previous one, has ceased. After one or two applications of the brake, the engineer can judge pretty closely what reductions to make in order to handle the train smoothly.

In making a service stop with a long all-air freight train, the first reduction should be made at a sufficient distance from the stopping point, and once the brakes are applied they should be held on until the train has come to a standstill. It is almost impossible to release the brakes on a very long train at slow speed without breaking the train in two, unless the retainers are used on the engine. Some roads are equipping their engines with retainers or other appliances that are intended to prevent the slack from running out violently in case it is necessary to release at slow speeds.

If necessary to release brakes while the train is moving, sufficient excess pressure should be pumped up to insure the prompt release of the brakes, and the engine retainers, if the engine is supplied with them, should be cut into service. Care should always be taken not to work steam until all brakes on the train have released, and even then the throttle should be

opened cautiously; for, if steam is worked before the rear-end brakes have released, the train is tolerably certain to be torn in two. After releasing the brakes, one second for each car in the train should be allowed before steam is used, so that sufficient time will be allowed for all brakes to release and the drawbar springs to adjust themselves.

EMERGENCY STOPS.

31. Brake Stops.—In cases of actual emergency, the brake valve should be thrown to full emergency position **and left there,** and sand should be used. Of course, it is possible to get the emergency action of the brakes without losing all the train-pipe air, but it is not good policy to try to do so in times of pressing danger. In the first place, if several cars with plain triples or with brakes cut out happen to be placed together, only the brakes ahead of such cars will go into quick action, while the ones back of them will set with a partial-service application only. If the valve is left in emergency position, a full application will be had on the cars back of, and full emergency on those ahead of, the cars with plain triples. Another possibility is that during the excitement the engineer may, in trying to bring the valve back to lap, move it to running position, thus releasing the brakes; or, if the valve is moved to lap too quickly, the surge of the air in the train pipe may kick off the forward brakes.

Everything considered, the safest plan is to move the brake valve to emergency position and leave it there, and not try to save air in the hope that if the train can be stopped in time the brakes can be released and the train backed up and thus avoid the danger. No matter what the position of the brake valve or the kind of train—whether all-air or part-air—in case of emergency, the brake valve should be moved to emergency position. It makes no difference whether the brakes have been applied in a partial, or even a full, service application—the handle should be moved to emergency just the same. In the former case, a full-emergency application may not be obtained, but a partial emergency may; and certainly a full-service

application would be. In the latter case, if all the brakes were set full, no advantage would be gained, but if any of the brakes had not equalized with their auxiliary, or if some of the brakes had partially or wholly leaked off, the reduction would cause them to equalize with their auxiliaries, thus making them hold better.

32. Reversing the Engine.—No matter how poor the driver- and tender-brakes are, if they are applied, the engine should **never be reversed** with the expectation of making a shorter stop than could be made with the brakes alone; reversing the engine under such conditions may cause the brake to lock and slide the drivers, in which case the retarding power of the engine is practically lost. It was proved by actual trial in the Galton-Westinghouse tests in England, and, later, in tests made by Mr. Thomas, Jr., Assistant General Manager of the N. C. & St. L. R. R., that a stop cannot be made in as short a distance with the driver brakes set and the engine reversed as when the brakes alone are used.

33. Accidental Emergency Stops.—Under this head are supposed to be included all emergency stops other than those purposely made by the engineer. Whenever the brakes apply suddenly without his aid, he should immediately lap the brake valve and leave it in that position, so as to bring the train to a standstill as soon as possible and save main-reservoir pressure for releasing brakes when the proper time comes for so doing. A sudden, unexpected application of the brakes may be caused by a conductor's valve being opened, by a burst hose, or by the train parting.

RUNNING.

POSITION OF BRAKE VALVE.

34. The brake valve should always be carried **in running position** while the brakes are off, since this is the only position in which excess pressure can be carried, and train-pipe leaks supplied by air from the main reservoir. In speaking of

excess pressure, it is meant that there is an excess of pressure in the main reservoir over that in the train pipe; that is, when main-reservoir pressure exceeds train-pipe pressure by a certain amount, *that* amount is called the excess pressure. The excess pressure, therefore, is carried in the main reservoir, and it is very important that it be carried and maintained at all times while the train is running. A sufficient excess should be carried so that when it is turned into the train pipe to release the brakes, it will do so promptly and also recharge the auxiliaries promptly.

The brake valve should not habitually be carried in release position; in fact, ordinarily, it should not be carried there at all. It should simply be moved to, and left in, that position until brakes have been released, when it should at once be moved to running position.

If an F-6 brake valve is left in release position too long, the train pipe will equalize with the main reservoir at 90 pounds pressure. If the valve is then moved to running position, the feed-valve will be held closed until train-pipe pressure has been reduced 20 pounds, or from 90 to 70 pounds. In case the train pipe has been overcharged, it is best to make a number of light applications and releases to reduce the train-pipe pressure to 70 pounds.

If a D-8 valve is left in lap position until the main reservoir is overcharged, the train pipe will be overcharged as soon as the valve is moved to running position, but the regular amount of excess pressure will still be carried. If the train pipe is so badly overcharged that it is advisable to reduce it, apply lightly and release a few times, as before.

SETTING OUT A CAR.

35. In **setting out** a car at a way station, first of all release the brakes; then close the angle cock on each side of the hose that is to be parted; then part the hose by hand, and hang up properly in the dummy couplings the hose of the car that is to be set out. Before the car is left in the side track, the air brake should first be released and then the hand-brake applied

(if necessary) to hold the car. The air brake should never be depended on to hold one or more cars on a grade for any length of time when not connected to the engine, since the brake may leak off and allow the cars to escape down the grade uncontrolled. In case cars must be left standing on a grade, always release the air brakes and apply the hand-brakes.

PICKING UP CARS.

36. When the engine is backed up to a number of cars that are to be switched or **picked up,** the train pipe and auxiliaries on which cars may be empty, it is well to apply and release the engine brakes a couple of times without recharging the auxiliary, and then place the brake valve on lap before the tender angle cock is opened. The auxiliary pressures on engine and tender will then be so low that if the engine brake *does* set in full when the angle cock is opened, the auxiliary and brake cylinders will equalize at such a low pressure that the main-reservoir pressure can very readily release them, and thus time will be saved, as the cars can be charged while they are being moved.

In coupling up a car or cars that have been picked up, and which may not be fully charged, the following precautions should be observed: First, be sure that the rear angle cock on the rear car is closed; then, after coupling the hose, open the angle cock on the car that was picked up, and then the one on the charged section of the train, opening the latter cock slowly so that pressure will not be fed into the undercharged car faster than it is supplied to the train pipe from the main reservoir. By taking this precaution, both time and air will be saved.

HOSE BURSTING.

37. As already mentioned, in the event of a **hose bursting,** the engineer should immediately lap the brake valve, and, as soon as the train stops, send out flags. The hose should be replaced by a new one (if at hand) or by the extra hose on the last car of the train, and the brakes then tested to see whether

they operate properly. If unsafe to replace the hose and test the train at the time, the angle cock immediately in front of the burst hose should be closed; the brakes back of it should then be bled off, and the train moved to a safe place, where the hose can be replaced and the brakes tested.

To Locate a Burst Hose.—If the leak is not too large, the brake valve should be left in partial-running position; the leak can then be located by the sound made by the escaping air, while at the same time main-reservoir pressure can be maintained. With a large leak, however, it would be impossible to open the valve wide enough to make a sound and still maintain the main-reservoir pressure; consequently, the brake valve should be moved periodically from lap to full release and back again. This will produce an intermittent sound by means of which the leak can be located.

BLEEDING BRAKES OFF.

38. There are two methods by which a triple valve can be made to release a brake. One is to increase the train-pipe pressure above that in the auxiliary—the other to reduce the auxiliary pressure below that in the train pipe. The first is the usual way—the second method is the one employed to **bleed off** a brake. To do this, the release valve, or bleed cock as it is often called, should be held open until air escapes from the triple exhaust, when it should immediately be closed. The blow at the exhaust indicates that the triple has moved to release position, and any further reduction of auxiliary pressure is not only a loss of air, but also causes a reduction in the train-pipe pressure, which in some cases may cause other brakes to apply.

BREAKING-IN-TWO OF TRAIN.

39. In case an all-air train should **break in two,** the brake valve should be lapped at once and the engine throttle closed, so as to bring the front section to a standstill as soon as possible. With such a train, the engineer should not attempt to keep the head end out of the way of the rear end, for the reason

that they are pretty sure to come together in any event; and the less the two sections separate, the less damage will be done when they come together. Flags should be whistled out, and as soon as the sections come to a standstill, the last angle cock of the front section should be closed and the brakes on that section released. As soon as the signal is given, the front section should be backed up and coupled to the rear section, and the brakes on the whole train released. A test should then be made to see whether the brakes are working properly.

In the event of a part-air train breaking in two, the course to pursue will depend on whether the break occurs in the air section, or back of it. If it occurs in the air section, pursue the same course as with an all-air train; if it occurs in the non-air section, the brakes, of course, will not set on the air section, and the engineer should endeavor to keep the head section out of the way of the rear section until the latter can be brought to a standstill.

HANDLING TRAINS ON LONG DOWN GRADES.

40. The manner in which the braking should be done on a long down grade depends, to a considerable extent, on local conditions, which may differ widely on different hills; consequently, no rule can be given that will cover all conditions. In order to give instructions for braking on any particular hill, the location of the easy and heavy parts of the grade should be definitely known; hence, instructions are usually issued by the companies, covering the conditions in each case.

In the absence of specific instructions, however, the following will serve as a guide: The pump should be run faster than usual while on the grade, so as to recharge the main reservoir promptly when necessary. Turn the retainer handles up just before the descent is begun, and make a moderately heavy reduction while the speed of the train is slow. It will be remembered that a given reduction will cause the brakes to hold better at slow, than at high, speed; hence, much better control of the train can be maintained, and air saved, by making the first reduction before the train has gained much headway. Good judgment should be used in making the

succeeding reductions, and they should be sufficient in number and amount to maintain the speed of the train well within safe limits.

When possible, curves and easy parts of the grade should be selected on which to release the brakes and recharge the auxiliaries; also, the last reduction before releasing should be heavier than the others, so as to slow down the speed considerably before releasing, since it not only will take a little longer for the brake-cylinder pressure to reduce down to 15 pounds, but the pressure in the brake cylinder will have a greater retarding effect at the slower speed. The auxiliaries should be fully charged just before the steep parts of the grade are reached, so as to have sufficient braking power to hold the speed within bounds while descending. Safety should, of course, be the first consideration, and, in general, the best results will be obtained by a slow speed and the use of retainers while on the grade.

QUICK ACTION DURING SERVICE REDUCTION.

41. If, when making a service reduction, the brakes set quick action, the trouble may be: (1) a broken pin in the graduating valve of the triple; (2) the graduating valve badly gummed up; (3) the triple piston gummed up or frozen, so that it will not respond to an ordinary train-pipe reduction; or, (4) if the train is short, a broken graduating spring *22* in the triple. In sections 3 to 6 of Art. **28**, Part 2, it was explained how these defects cause the brake to apply quick action.

LOCATING DEFECTIVE TRIPLE.

42. Quick action during a service reduction is due to one of the triples, for some reason, not operating in service position, but only in emergency position, thus causing the others to fly on also. If the trouble is due to a sticky triple, or to a broken or gummed-up graduating valve, it may be located as follows: Make a light service reduction and, since all brakes but the defective one will apply, look for a brake that has not set. This, when found, may be cut out at once and the brakes again tested, to see if the brake cut out is the one that has been

causing the trouble. Another method is to make a light reduction and, when a brake is found that has not applied, make a second or even a third reduction, if necessary, while some one watches the brake to see if it goes on quick action only; if so, it should be cut out. Should the trouble be due to a weak or broken graduating spring *22*, the triple will move to emergency position when a light reduction is made, and thus cause all of the brakes to fly on. Generally, a triple with a broken graduating spring is rather hard to locate. To do so, the brakes may be watched to see which goes on quick action first; or an angle cock in the middle of the train may be closed to see on which half the defective triple is located, this being repeated with the portion of the train containing the defective triple until but a few cars have to be watched. These can either be cut out one at a time, or else they can be watched to see which piston moves out first. When located, the defective triple should be cut out.

BRAKES STUCK ON.

43. If it is found that the brakes cannot be released by placing the brake valve in full-release position, it should be placed on lap to obtain excess pressure, and then thrown into full release. The brakes on a long train with quick-action triples are especially liable to stick after an emergency application, on account of the auxiliary and brake cylinder equalizing at a higher pressure than usual. On a very long train the rear brakes are liable to stick after a very light application, because the train-pipe pressure cannot be raised enough to move the sticky triple; with a heavier reduction this triple will very likely release promptly.

USE OF SAND.

44. It is well known that by the proper use of sand the wheels may be made to grip the rails much better, thus lessening the danger of the wheels being flattened from sliding. On the other hand, if the sand is not properly used and the wheels begin to slide, the flat spots formed will be worse than if no sand were used.

When necessary to use sand in making a stop, the rails under the entire train should be sanded by the time the first application is made, or at least before the brakes have applied very hard, and the sand should be used continuously until the train comes to a standstill. Sand should never be used after the wheels have begun to slide, since it will not start them turning again, but will simply increase the wear on the wheel and thus make the resulting flat spot larger than it otherwise would be. In the event of the wheels sliding, the brakes should be released, if practicable, and the rails sanded; after which the brakes may be applied again, but the rails should be continuously sanded until the stop is made. Whenever the rails are bad, sand should be used in applying the brakes, to avoid skidding the wheels. It is bad practice to attempt making a stop without using sand and then, after the brakes have been fully applied and it looks as though the train would not stop soon enough, to drop sand on the rails. Some of the wheels may be sliding at the time, and the sand will thus be the cause of some very bad spots.

WHEELS SLIDING.

45. When the brakes are applied, there are two forces acting on the wheels: one, the force exerted by the brake, which tends to prevent the wheel from turning, and thus tends to cause it to slide over the rail like a sled runner; the other, the force exerted between the wheel and the rail, which resists this tendency to slide, and thus tends to keep the wheel turning. As long as the latter force is greater than the former, the wheel will continue to revolve; but if, for any reason, the force exerted by the brake is the greater, the wheel will **slide.** It will thus be seen that a wheel may be made to slide either by reducing the adhesion between the wheel and the rail (as when the rails are greasy), or by increasing the force exerted by the brake above a certain amount.

Apart from the matter of slippery rails, therefore, the wheels may be slid: if the piston travel is too short, whether due to its adjustment, to the hand-brake being partially set, or otherwise; if the leverage is too great; if the brake fails to release after

a heavy application in making a stop; if a heavy reduction is made when the train is moving slowly; or if the auxiliaries are overcharged and allowed to equalize with the brake cylinders. Some types of driver brakes may lock and skid the wheels if the piston travel is allowed to become too long.

USE OF CONDUCTOR'S VALVE.

46. In passenger service, each car is provided with a valve called the conductor's valve (see Fig. 1, Part 1), by means of which the brakes can be applied from the cars. This valve is connected to the train pipe by means of a branch pipe, and when the valve is open it makes a direct passage from the train pipe to the atmosphere. The conductor's valve is intended to be used only in cases of emergency, when it is necessary to stop the train as soon as possible. It should be opened gradually and held open until the train comes to a stop, for if it should be closed while the engineer's brake valve is in running position, the brakes will be released again.

DOUBLE-HEADING.

47. In **double-heading,** it is the duty of the leading engineer to handle the brakes, and the cut-out cock in the train line under the brake valve of the "following" engine should be closed, so as to give him absolute control. After closing the cut-out cock, the engineer of the following engine should place his brake valve in running position and keep his pump operating so as to maintain the full main-reservoir pressure in case the leading engineer desires assistance in releasing brakes. In that event, the following engineer should open the cut-out cock under his brake valve and place his valve in full release, but the brake valve should be moved to running position, and the cut-out cock closed again as soon as the brakes release, or the control of the train will be taken away from the leading engineer.

If the following engine is not supplied with a cut-out cock, the brake valve should be carried on lap instead of in running position; a blow may then occur at the train-pipe exhaust when brakes are released. When the leading engineer places

his brake valve in release position, he increases the train-pipe pressure above that in chamber *D* of the following engineer's brake valve, and the equalizing piston of that valve may be raised, and open the train-pipe exhaust. In this event, the brake valve should be placed in full release until the blow ceases, and then be returned to lap.

PISTON TRAVEL AND ITS ADJUSTMENT.

LONG AND SHORT TRAVEL.

48. The subject of **piston travel** and its **adjustment** is an important one, and should be thoroughly understood, since not only the efficiency of the brake, but also the smoothness with which a train can be handled, depends to a great extent on the proper adjustment of the brake-piston travel.

The auxiliary reservoir used with any brake cylinder is of such a size that if charged to 70 pounds it will equalize with the brake cylinder at 50 pounds, if the travel of the brake piston is adjusted to 8 inches. If the piston travel is less than 8 inches, the auxiliary and brake cylinder will equalize at a higher pressure than 50 pounds, while if the travel is more than 8 inches, they will equalize at a lower pressure. When a train-pipe reduction is made, air passes from the auxiliary (into the brake cylinder) until the pressures in auxiliary and train pipe are about equal. Thus, for a given train-pipe reduction, the same amount of air is discharged into the brake cylinder, regardless of the length of the piston travel. That is to say, if a 7-pound reduction were made, the same amount of air would pass into a brake cylinder having a 5-inch piston travel as would pass if the travel were 8 inches. With the 5-inch travel, however, the air would have to occupy less space than with the 8-inch travel; hence, it can readily be seen that the brake with the short travel will develop the greater pressure.

EQUALIZATION TESTS.

49. The following table gives the results of a number of **tests** made with a freight equipment, each pressure given

being the average of several trials with each piston travel. It shows the pressure obtained in the brake cylinder for different piston travels in both service and emergency applications of the brake.

BRAKE-CYLINDER PRESSURES.

Service Reduction From 70 Pounds Train Pipe.	Piston Travel.							
	4″	5″	6″	7″	8″	9″	10″	11″
7	25	23	17½	13	10½	8		
10	49	43	34	29	23½	19½	17	14
13	57	56	44	37½	33	29	24	20
16			54	47½	41½	35	29	24
19				51	47	40	36½	32
22					50	47½	44	39
25							47	45
Emergency reduction	62	61	59½	58½	57½	56½	55½	55

Explanation of Table.—The first column on the left gives the reduction in train-pipe pressure; the second column gives the brake-cylinder pressure resulting from the corresponding reduction in column 1, when the brake-piston travel is only 4 inches; the third column gives the resulting brake-cylinder pressure when the piston travel is 5 inches, and so on for the other columns. For example, a train-pipe reduction of 7 pounds will result in a brake-cylinder pressure of 25 pounds with a 4-inch travel, or 8 pounds with a 9-inch travel; a 10-pound reduction will result in 43 pounds brake-cylinder pressure with a 5-inch travel, and only 14 pounds with an 11-inch travel.

By studying the table carefully, some very useful information may be derived. It will be found that short-travel brakes equalize quicker, and with a less reduction, and also exert a greater pressure than do long-travel brakes. For instance, a 13-pound reduction will cause all brakes with 4-inch travel to equalize at 57 pounds pressure, and with 5-inch ones to equalize at 56 pounds; while a 25-pound reduction is necessary to set a brake full with a 10- or 11-inch travel, and then they equalize at only 47 pounds and 45 pounds, respectively.

It will be seen, also, that if three brakes, with, say, 4-, 8-, and 11-inch travel, respectively, were in the same train, the retarding force exerted by each would vary greatly at each reduction. For instance, a 7-pound reduction would cause the first to develop 25 pounds pressure per square inch; the second, 10½ pounds; while the pressure in the cylinder having the 11-inch travel would not be sufficient to move the piston out the full stroke. Now, if the brake cylinders were of 10-inch diameter, a pressure of 25 pounds per square inch in the short-travel brake would develop a total force of 1,963 pounds; 10½ pounds per square inch in the medium-travel brake would develop a total force of 825 pounds; while the long-travel brake would hardly develop sufficient power to force the piston to its full stroke. Thus, of these three brakes, with a 7-pound reduction, the holding power of the first would be nearly 2½ times as great as that of the second, while the third would be altogether ineffective. It is this difference in holding power, due to unequal piston travel, that makes it so difficult to handle freight trains smoothly.

To sum up briefly, the table shows: (1) that the short-travel brakes in a train hold harder at each reduction than the long-travel ones; (2) that they equalize with their brake cylinders with a less train-pipe reduction, hence equalizing sooner than the long-travel brakes; (3) that they equalize at a higher pressure; (4) that since they equalize at higher pressure, they must release later than the brakes with long travel after a full reduction.

When the train-pipe pressure is increased to release the brakes, it will release those having a 10-inch travel at 47 pounds pressure, but it must be increased 9 pounds more, or to 56 pounds, to release those having a 5-inch travel. As soon as the first brakes release, their auxiliaries commence recharging, thus making train-pipe pressure increase more slowly than it otherwise would, and delaying the release of the short-travel brakes. If sufficient excess pressure to release the short-travel brakes is not carried, the wheels will probably be slid while the brakes are being pumped off, and bad spots will result. Besides this, the train is subjected to severe wrenches tending

to break it in two, on account of the long-travel brakes releasing before the others. However, if the travel is adjusted within certain limits, all brakes will start releasing at about the same time, the tendency being for the long-travel brakes to release first. If the travel were uniform throughout the train, the tendency would be for the brakes nearest the engine to release first, since train-pipe pressure is increased there first. If none of the brakes have been set in full, they should begin releasing at about the same instant (regardless of the difference in piston travel); this is due to the fact that until a brake equalizes, its auxiliary pressure is practically equal to train-pipe pressure.

The last row of figures in the table shows that the resulting brake-cylinder pressure obtained in an emergency application of the brakes decreases as the piston travel is increased.

RUNNING TRAVEL.

50. The piston travel is greater by from 1 to 2 inches when the train is running than when standing still, on account of (1) loose journal brasses, allowing the wheels to move; (2) loose boxes in pedestals; (3) loose truck kingbolts, allowing the trucks to pull together; and (4) the "spring" in the brake beams, levers, or connections. The amount that the brake piston travels when the brakes are applied and the train is in motion is called the **running travel.** Brake beams are sometimes so hung that the brake shoes pull down lower on the wheels when the brakes are applied, and since in that case the shoes travel farther to touch the wheels, the piston travel is increased.

Also, the travel is generally greater when the car is loaded than when unloaded. If the brake beams are hung to the side sills of a car or to the bolster, they will be lowered (consequently increasing the travel) when the car is *loaded*, and raised again (shortening the travel) when it is *unloaded.* To avoid this bad effect, some roads hang the brake beams to such a part of the truck that the center of the brake shoes is always the same distance from the rails, regardless of whether the car is loaded or not. The method gives very good results.

THE PROPER PISTON TRAVEL.

51. The different parts of the air-brake apparatus are so designed and constructed that the proper brake-shoe pressure will be obtained—in a full-service application of the brakes—with a pressure of 50 pounds per square inch in the brake cylinder. The brake, therefore, would be safer and more efficient if the piston travel were always to remain such as to just give 50 pounds pressure in the brake cylinder—i. e. between 7 and 8 inches—but as the brake shoes wear quite rapidly, the travel is bound to increase unless, as such wear proceeds, this travel is automatically adjusted by means of a **slack adjuster.** Automatic slack adjusters not being in general use, it has been customary on most roads to take up the shoe slack on passenger cars and tenders until the piston travel is about 6 inches; the brake is then allowed to run until the wear of the brake shoe increases the travel to 8 inches, when the slack is again taken up.

The limits between which the piston travel is allowed to vary are, on most roads, as follows: For passenger-car and tender brakes, between 6 and 8 inches; for standard freight cars, between 5 and 9 inches. On the engine, one auxiliary reservoir supplies air for the two driver-brake cylinders; consequently, a 1-inch travel of each of the driver-brake pistons is equivalent to a 2-inch travel of a car-brake piston. On some roads the driver-brake piston travel is allowed to vary between $\frac{1}{3}$ and $\frac{2}{3}$ of the full stroke of the piston. The better practice, however, is to use an air gauge on the brake cylinder and adjust and maintain the travel so that 50 pounds per square inch will be obtained in the brake cylinder on a full application of the brakes.

MEASURING THE PISTON TRAVEL.

52. To **measure** the brake-piston travel, force the push rod—if one is used—into the sleeve until it bottoms on the brake piston, and the latter is forced against the cylinder head; then make a mark on the end of the cylinder and measure the distance between the mark and the center of the lever pin in the push rod. Apply the brake in full, and again measure

from the same mark on the cylinder to the center of the lever pin; the difference in the measurements will be the amount that the piston travels.

If it is desired to measure the piston travel on an uncharged car, proceed as before, only in this case the brakes will have to be set by hand; if necessary, use a piece of wood or a bar of iron as a lever to set them up tight. This method can only be used on cars on which the air brakes and hand-brakes move the piston lever in the same direction in applying the brake.

ADJUSTING BRAKES.

53. Adjusting Car Brakes.—In regulating the piston travel of a car or tender brake (*Hodge* system), the slack of the brake shoes is taken up by means of the truck dead lever. This is accomplished by moving this lever so as to reduce the shoe clearance, since the smaller this clearance, the less the piston will have to move to draw the shoes up against the wheels. The top of the dead lever is held by a pin that runs through a guide and the lever, the top of the lever traveling between the sides of the guide. The position of the lever in the guide can be changed by removing the pin and moving the lever until it connects with one of the many holes in the guide. Extra holes are sometimes put in other connections of the brake rigging so that, if necessary, part of the slack may be taken up there. For instance, if sufficient slack cannot be taken up at the truck dead lever, one or two holes should be taken up in the other connection and the travel then adjusted by means of the truck dead lever.

On most freight cars, both the hand-brake and the air brake move the levers in the same direction in applying brakes; hence they are said to work together. On nearly all passenger, and a few freight, cars, however, the hand-brake and the air brake move the levers in opposite directions; if, then, the hand-brake chain is wound up a little, the piston travel will shorten a corresponding amount when the air brake is next applied. When the hand-brake and the air brake work together, winding up the brake chain does not shorten the piston travel.

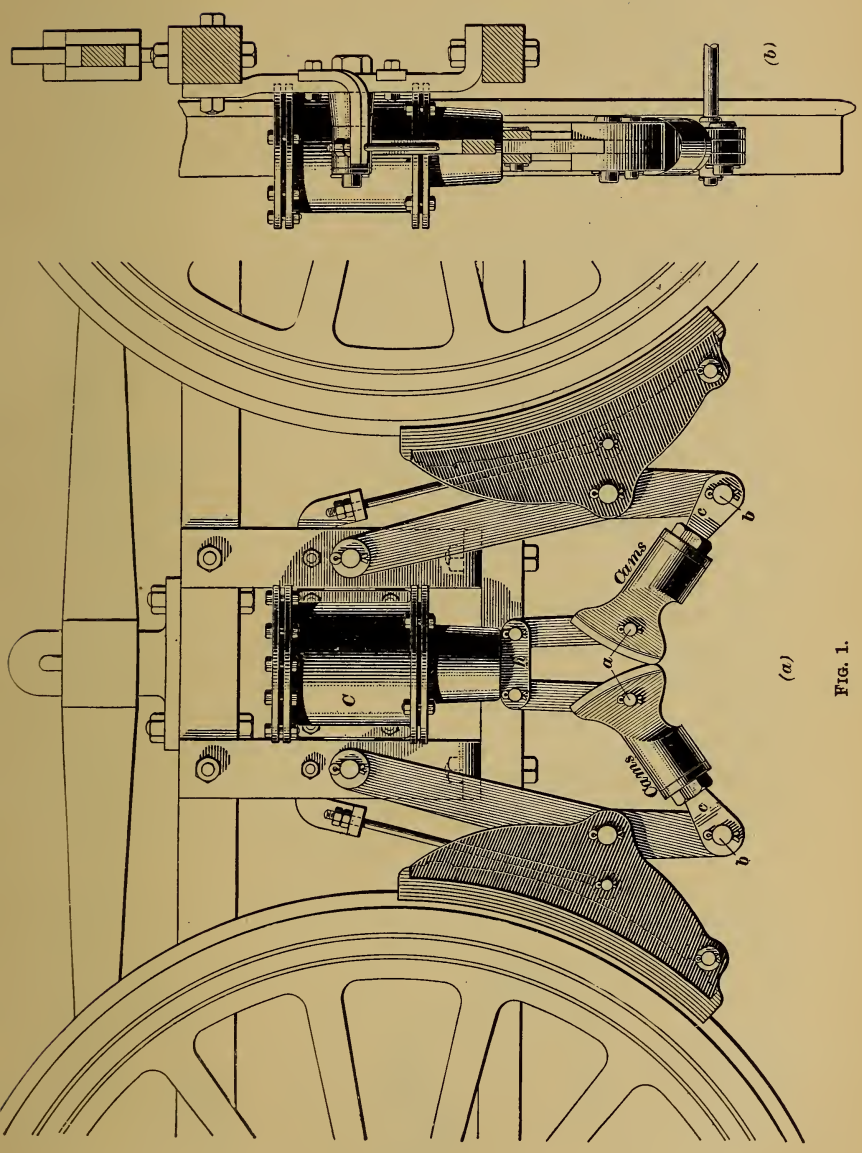

Fig. 1.

The practice of shortening the piston travel by winding the hand-brake up a little, instead of moving the dead lever, is a bad one, and is decidedly dangerous. If the brake dog on the hand-brake should work out of the ratchet, the slack would run out; also the extra strain on the brake chain tends to break it. If too much chain is wound up, the travel may be shortened so much that the piston will not cover the leakage grooves and the brake will not apply. Then, again, if the air brake tends to turn the hand-brake wheel in a direction opposite to that which it must be turned by hand to set the brakes, there is always danger of a person being hurt should he try to turn the hand-brake when the engineer happens to be setting the air brakes.

54. Cam Driver-Brakes.—In Fig. 1 are shown two views of the *push-down* type of **cam driver-brake,** (*a*) being a side view, and (*b*) an end view. As air is admitted into the brake cylinder *C*, the piston and, consequently, the crosshead *h* are forced downwards, thus causing the cams to roll on each other and move the cam-screw pins outwards, pressing the shoes against the wheels.

The distance between the link pin *a* and the cam-screw pin *b* can be changed by means of the cam-screw *c*, and it is by means of this screw that the piston travel is adjusted. To shorten the travel, the distance between the pins is lengthened.

In taking up the slack of the brake shoes, care must be exercised to lengthen both cam-screws the same amount, so that the point of contact of the cams will be in line with the center of the brake cylinder. Sufficient shoe clearance should be allowed.

55. Outside Equalized Driver Brake.—In Fig. 2 are given two views of the American outside **equalized driver brake** as generally used at the present time on engines having three or more pairs of drivers, (*a*) being a side view and (*b*) a plan view. In this type of brake the piston is connected to the brake rod *R* by a bell-crank lever *L* that turns on the pin *P*, so that when the brake piston is forced outwards, the brake rod *R* is drawn backwards and applies the brake shoes to the wheels.

A slack adjuster *T* (popularly spoken of as a *turnbuckle*) is provided for the purpose of taking up the slack as the brake

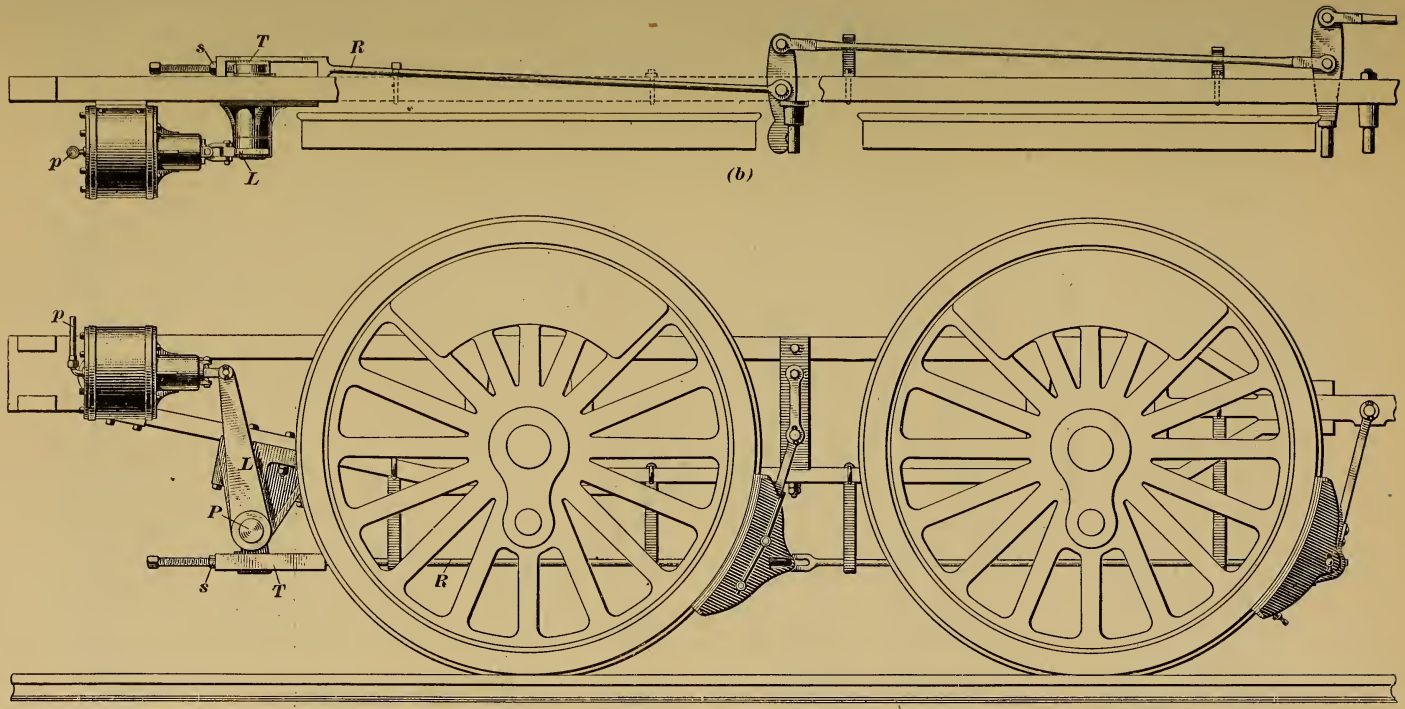

FIG. 2.

shoes wear. This is accomplished by loosening the locknut *s* on the screw bolt, and turning the bolt in such a way as to pull the brake rod *R* backwards, thus moving the brake shoes up nearer to the wheels. The pipe *p* leads from the brake cylinder to the triple valve.

BRAKE GEAR.

LEVERS AND LEVERAGE.

56. The foundation brake gear on engines, tenders, and cars consists simply of a system of levers connected together by rods; and it is by means of these levers that the force developed in the brake cylinder is transmitted and applied to the wheels.

It is desirable, therefore, to be able to calculate the braking power that a system of levers is capable of exerting, and to do this the different classes of levers must be studied.

SIMPLE LEVERS.

57. The Straight Lever.—A **lever** is any bar that is capable of being turned about a fixed axis or pivot, called the **fulcrum,** as in Figs. 3, 4, and 5. In these figures, *W*, the object to be lifted, is called the *weight;* the force *P*, employed to lift the weight, is called the *power;* and the point *F*, round which the lever turns, is called the *fulcrum.* That part of the lever *Fb* between the fulcrum and the weight is called the *weight arm* of the lever, while the part *Fc* between the fulcrum and the power is called the *power arm.*

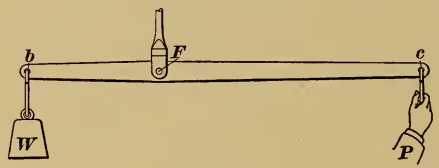

FIG. 3.

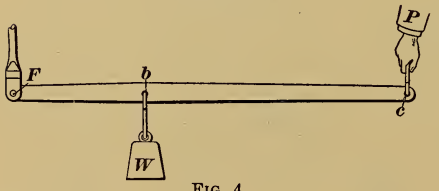

FIG. 4.

The fulcrum *F*, it is to be remembered, is stationary, and the lever is perfectly free to turn on it. Now, if the weight *W* is

great enough, it will cause the lever to turn or rotate about the point F against the action of the power P; if, on the other hand, the power is great enough, it will cause the lever to rotate about F against the action of the weight W. In other words, it will raise the weight. When the power P is just sufficient to balance the weight W, and the lever, therefore, does not move, it will be found that:

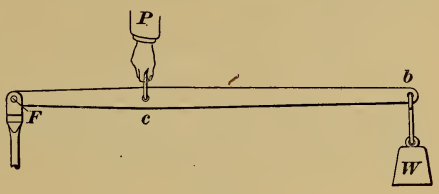

FIG. 5.

Rule I.—*The power multiplied by the power arm is equal to the weight multiplied by the weight arm.*

Thus, in Fig. 5, the power P, multiplied by the distance Fc, will just equal the weight W multiplied by the distance Fb.

Or, expressing this in symbolic form,

$$P \times Fc = W \times Fb.$$

From this it can readily be shown, that

$$P = \frac{W \times Fb}{Fc}; \qquad (1)$$

$$W = \frac{P \times Fc}{Fb}; \qquad (2)$$

$$Fc = \frac{W \times Fb}{P}; \qquad (3)$$

$$Fb = \frac{P \times Fc}{W}; \qquad (4)$$

where P stands for the force or power applied, W for the weight, Fc for the length of the power arm, and Fb for the length of the weight arm.

It will be seen that only four quantities enter into these equations, as the above expressions are called, and if any three of these quantities are known, the other can be determined by means of one of the equations. The use of the equations, or formulas, is illustrated in the following examples:

EXAMPLE 1.—If the power arm of the lever is 20 inches long and the weight arm 10 inches long, what power must be applied to just balance a weight of 1,000 pounds?

Solution.—In this example we see that $Fc = 20$, $Fb = 10$, $W = 1{,}000$, and P is to be found; therefore, substituting these values in formula (1), we find that

$$P = \frac{W \times Fb}{Fc} = \frac{1{,}000 \times 10}{20} = 500 \text{ pounds.} \quad \text{Ans.}$$

Example 2.—If a power of 1,000 pounds is applied to the lever of example 1, how many pounds weight will it balance?

Solution.—In this example, $Fc = 20$, $Fb = 10$, and $P = 1{,}000$; W is to be determined, hence equation (2) will be used. From this,

$$W = \frac{P \times Fc}{Fb} = \frac{1{,}000 \times 20}{10} = 2{,}000 \text{ pounds.} \quad \text{Ans.}$$

Example 3.—Suppose a force of 1,600 pounds at P has either to support a weight or exert a force of 3,200 pounds at W. How long must the power arm be, the weight arm being 10 inches?

Solution.—In this case, $P = 1{,}600$, $W = 3{,}200$, and $Fb = 10$. Therefore,

$$Fc = \frac{W \times Fb}{P} = \frac{3{,}200 \times 10}{1{,}600} = 20 \text{ inches.} \quad \text{Ans.}$$

Example 4.—If, in example 3, the power arm were 10 inches long, what length would the weight arm have to be?

Solution.—Here $P = 1{,}600$, $W = 3{,}200$, and $Fc = 10$; hence,

$$Fb = \frac{P \times Fc}{W} = \frac{1{,}600 \times 10}{3{,}200} = 5 \text{ inches.} \quad \text{Ans.}$$

58. Suppose that the weight arm Fb of the lever shown in Fig. 6 is twice as long as the power arm Fc; then, if the lever is turned about the fulcrum F until it occupies any other position, as $b'Fc'$, it will be found by actual measurement that the point b of the lever travels just twice as far in moving to b' as c does in moving to c'. If the weight arm were four times as long as the power arm, it would be found that the point b would always travel four times as far as the point c when the lever was moved through any distance. In other words, the distances

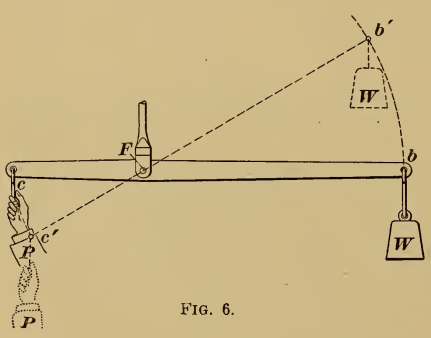

Fig. 6.

through which the power and the weight move are always in the same ratio as the lengths of their arms.

This being true, we may, in place of the statement that the power multiplied by the power arm is equal to the weight multiplied by the weight arm (rule I), write:

Rule II.—*The power multiplied by the distance through which the power moves is equal to the weight multiplied by the distance through which the weight moves.*

If the power moves through a distance $c\,c'$, while the weight moves through a distance $b\,b'$, then by substituting $c\,c'$ and $b\,b'$ for Fc and Fb, respectively, in the equations (1) and (2) of Art. **57**, we have:

$$P = \frac{W \times b\,b'}{c\,c'}, \text{ and } W = \frac{P \times c\,c'}{b\,b'}.$$

Example 1.—If the point of application b of the weight travels 2 inches while the point of application c of the power travels 8 inches, what force must be exerted on the lever to cause it to exert a force of 2,000 pounds?

Solution.—In this case, $c\,c' = 8$, $b\,b' = 2$, and $W = 2{,}000$; hence,

$$P = \frac{W \times b\,b'}{c\,c'} = \frac{2{,}000 \times 2}{8} = 500 \text{ pounds.} \quad \text{Ans.}$$

Example 2.—In the above example, if a force of 1,000 pounds is applied at P, what force would the lever exert at W?

Solution.—Here, again, the weight moves 2 inches while the power moves 8 inches; hence,

$$W = \frac{P \times c\,c'}{b\,b'} = \frac{1{,}000 \times 8}{2} = 4{,}000 \text{ pounds.} \quad \text{Ans.}$$

The principle embodied in rule II was made use of by Mr. H. A. Wahlert in inventing a method for determining the braking power developed by a cam driver-brake.

59. Classes of Levers.—Levers are divided into three classes, depending on the relative positions of the fulcrum and the points of application of the power and the weight.

In levers of the *first class*, Fig. 3, the fulcrum F is between the points of application of the power P and weight W. Fig. 7 represents a car truck lever of this class applied to a car wheel.

In levers of the *second class*, Fig. 4, the weight W is between the fulcrum F and power P. This class is represented in Fig. 8, as applied to a car wheel.

In levers of the *third class*, Fig. 5, the power P is between the fulcrum F and the weight W. This class is represented in Fig. 9, as applied to a car wheel.

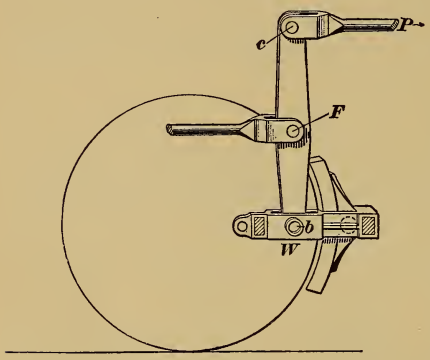

FIG. 7.

60. The Weight Sustained by the Fulcrum.—The force exerted on the fulcrum of a lever can be calculated by assuming that the fulcrum has changed places with either the power P or the weight W, and then using the proper equation. For instance, in example 1, Art. **57**, it was found that a force of 500 pounds at P would balance 1,000 pounds at W, the lever arms being 20 inches and 10 inches, respectively. Now, to find the force sustained at F, assume the fulcrum to have changed places with W. The power arm in that case would be $20 + 10 = 30$ inches long, while the weight arm would remain the same as before, or 10 inches, and we should have

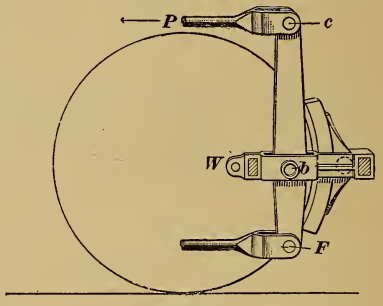

FIG. 8.

$$W = \frac{P \times Fc}{Fb} = \frac{500 \times 30}{10} = 1{,}500 \text{ pounds.}$$

This, it will be noticed, is equal to the sum of the power P and weight W.

If this method is applied to the three classes of levers, it will be found that: (1) the pressure on the fulcrum of a lever of the first class is equal to the sum of the power and weight;

(2) the pressure on the fulcrum of a lever of the second class is equal to the difference between the weight and the power; while (3) the pressure on the fulcrum of a lever of the third class is equal to the difference between the power and the weight.

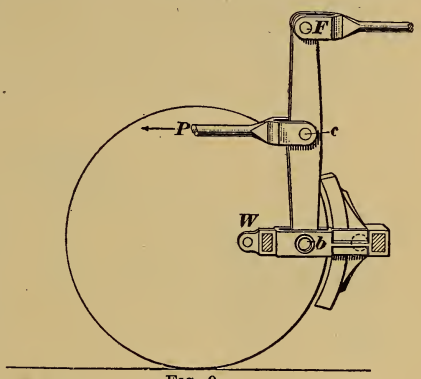

FIG. 9.

61. Bent Levers. All rules and equations that apply to the straight lever apply equally well to the **bent lever,** if care is taken to determine the *true* or *virtual* lengths of the lever arms. In the case of a straight lever with the forces acting at right angles to it, the arms may be measured along the lever itself; in all other cases (such as when: 1, the forces are parallel, but act at an angle to the lever; 2, the forces do not act parallel to each other; or 3, if the lever is bent), the weight arm or power arm must be taken as *the perpendicular distance from the fulcrum F to the line of direction in which the weight or power acts.*

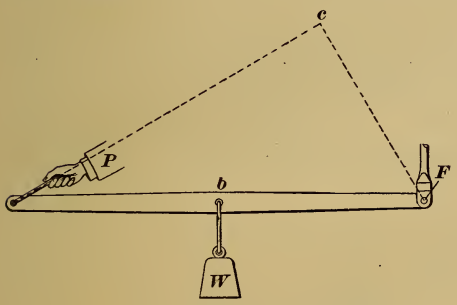

FIG. 10.

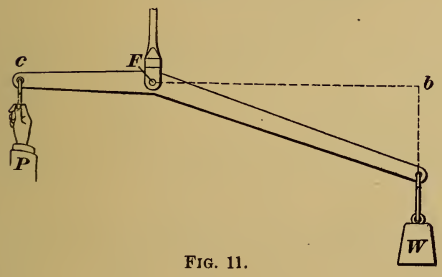

FIG. 11.

Figs. 11, 12, and 13 represent different styles of bent levers. In each case the power arm is represented by the line Fc, the weight arm being represented by the line Fb. Fig. 10 is dealt with in the same way.

COMPOUND LEVERS.

62. Description.—A compound lever is a combination of simple levers so arranged that when a power is applied to the first lever it actuates all of the others and causes a force to be exerted by the last lever of the combination. When a force

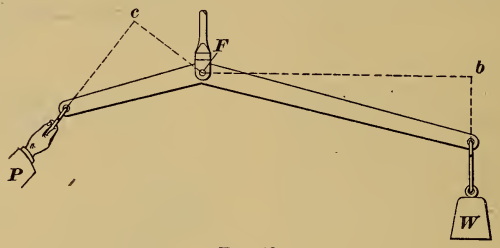

FIG. 12.

is applied to the first lever, it exerts a force that is applied to the second lever; the force exerted by the second lever is applied to the third; and so on.

Such a lever is shown in Fig. 14, in which there are three simple levers; the weight arm of the first is connected to the power arm of the second, and the weight arm of the second to the power arm of the third. It will be seen that by applying sufficient power at *P* to operate the first lever, the others will

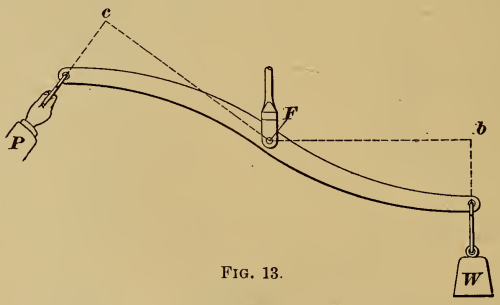

FIG. 13.

also be operated, and the weight *W* of the third lever will be raised.

It will be noticed, also, that the force exerted by the end of the weight arm of the first lever is the power applied to the second; and the force exerted by the second is the power applied to the third; and so on for any number of levers.

63. Law of the Compound Lever.—The law that governs the compound lever may be stated as follows: *The power P multiplied by the product of the power arms of all the component simple levers, is equal to the weight W multiplied by the product of the weight arms of all these levers.*

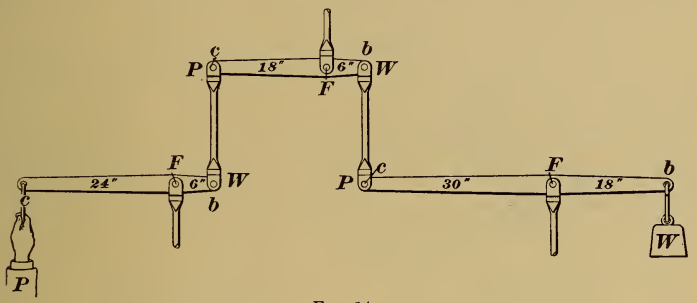

FIG. 14.

From this law the following rules may be deduced:

Rule III.—*The power P that must be applied to a compound lever to balance a given weight or produce a given pressure W, may be found by multiplying the product of the weight arms of all the simple levers by the weight, and dividing this by the product of the power arms of all these levers.*

EXAMPLE.—How much power must be applied at *P*, Fig. 14, to balance 1,000 pounds at *W*?

SOLUTION.—The weight arms of the levers are 6, 6, and 18 inches, and the power arms 24, 18, and 30 inches, respectively. Hence, from rule III, the power

$$P = \frac{6 \times 6 \times 18 \times 1{,}000}{24 \times 18 \times 30} = 50 \text{ pounds.} \quad \text{Ans.}$$

Rule IV.—*The weight that a given power will balance, when applied to a compound lever, may be found by multiplying the product of the power arms of all the simple levers by the power, and dividing this by the product of the weight arms of all the levers.*

EXAMPLE.—If a force of 50 pounds is applied at *P*, Fig. 14, how many pounds will it balance at *W*?

SOLUTION.—From rule IV it will be found that 50 pounds at *P* will balance a weight of

$$W = \frac{24 \times 18 \times 30 \times 50}{6 \times 6 \times 18} = 1{,}000 \text{ pounds.} \quad \text{Ans.}$$

LAWS OF LEVERS APPLIED TO BRAKE GEARS.

64. In order to apply these laws to any particular system of levers, it is best to make a diagram showing the position of the fulcrums, the length of the lever arms, and the line of direction of the forces applied to, or exerted by, the levers. Then, since the force developed by the brake cylinder is generally known, the power exerted by the lever can be readily found by applying the proper rules or formulas.

To illustrate the application of the laws of levers to actual brake gears, the braking power of the Hodge and the Stevens systems of car-brake levers, and of the cam and the American equalized types of driver brakes will be determined.

65. The Hodge System.—A diagram of the **Hodge** system is shown in Fig. 15. It will be seen to consist of two compound levers operated by the same brake cylinder, each compound lever consisting of four simple levers. The first of these is called the *cylinder lever;* the second, the *floating lever;* the third, the *truck live lever;* while the fourth is called the *truck dead lever.* The fulcrum of each lever is marked F, and the points at which the power and weight are applied are marked P and W, respectively. The right and left cylinder levers are of the first and third classes, respectively; the floating levers are of the third class; while the truck live levers and truck dead levers are of the first and the second class, respectively. The brake cylinder is assumed to exert 4,700 pounds pressure in an emergency application.

Calculating the Power of the Hodge System.—To calculate the power applied to the brake shoes, it is now simply a question of using the proper rules for the separate levers. For the first, or cylinder lever, $P = 4{,}700$; therefore,

$$W = \frac{4{,}700 \times 15}{15} = 4{,}700 \text{ pounds},$$

and this is the force applied to P of the floating lever.

The pressure on the fulcrum F of the cylinder lever is equal to the sum of P and W, or 9,400 pounds (see Art. **60**). P of

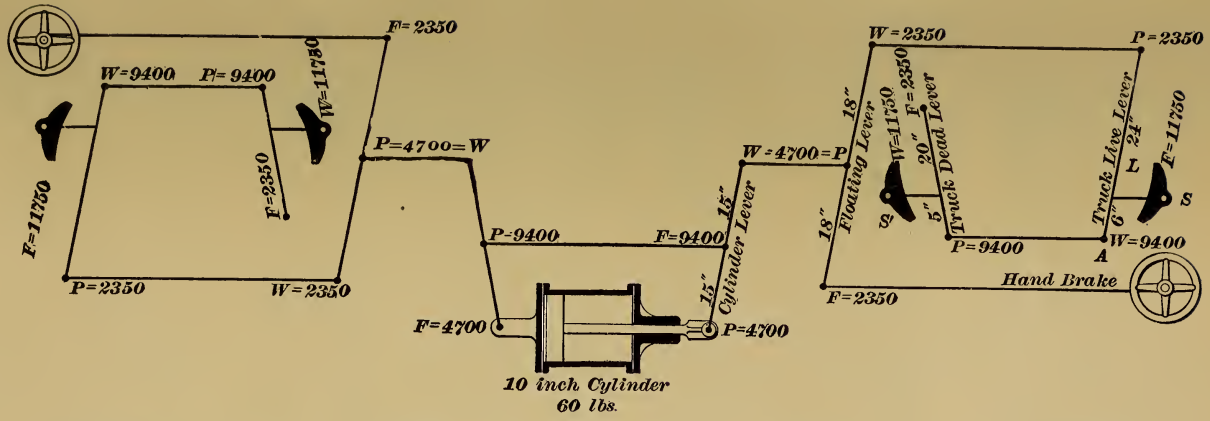
F=2350
W=9400
P=9400
W=11750
F=11750
F=2350
P=2350
W=2350
P=4700=W
P=9400
F=9400
F=4700
P=4700
15"
Cylinder Lever
15"
W=4700=P
W=2350
P=2350
18"
Floating Lever
W=11750
F=2350
20"
Truck Dead Lever
5"
S'
18"
P=9400
Truck Live Lever
24"
L
F=11750
S
6"
W=9400
A
Hand Brake
F=2350
10 inch Cylinder
60 lbs.

FIG. 15.

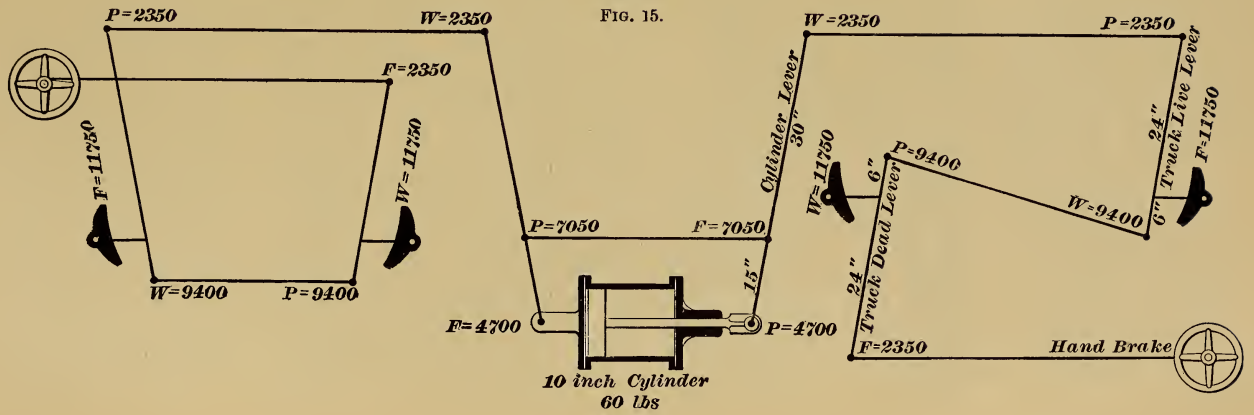
P=2350
W=2350
F=2350
F=11750
W=11750
W=9400
P=9400
P=7050
F=7050
F=4700
P=4700
15"
Cylinder Lever
30"
W=2350
P=2350
W=11750
6"
P=9400
24"
Truck Dead Lever
W=9400
24"
Truck Live Lever
6"
F=11750
F=2350
Hand Brake
10 inch Cylinder
60 lbs

FIG. 16.

the floating lever is 4,700, as already remarked; therefore,

$$W = \frac{4{,}700 \times 18}{36} = 2{,}350 \text{ pounds},$$

and the pressure on F of this lever is $4{,}700 - 2{,}350 = 2{,}350$ pounds. P of the truck live lever is 2,350 pounds; therefore,

$$W = \frac{2{,}350 \times 24}{6} = 9{,}400 \text{ pounds},$$

and the force applied to the wheels at F is $9{,}400 + 2{,}350 = 11{,}750$ pounds. P of the truck dead lever is 9,400; hence,

$$W = \frac{9{,}400 \times 25}{20} = 11{,}750 \text{ pounds},$$

the force applied to the wheels, while the force exerted at the fulcrum F is $11{,}750 - 9{,}400 = 2{,}350$ pounds.

The calculations for the left-hand compound lever are made in the same way, beginning with 9,400 pounds applied to P of the cylinder lever.

We may remark here that the truck live lever L may also be regarded as a lever of the second class, the relative positions of power, weight, and fulcrum then being as noted in Fig. 8. If we have in mind the exerting of a force on shoes S, then the end A of lever L must be regarded as the fulcrum. If, on the other hand, we are considering the exerting of a force on the shoes S', then the point of contact of S on its wheel becomes the fulcrum. Thus, the lever L is, at one and the same time, a lever of the first or the second class, according to the point of view we take, that is, whether we are considering the question of exerting a pressure on S or on S'. In either case, of course, the numerical results are the same.

66. The Stevens System.—The Stevens system of car-brake levers is shown in diagram in Fig. 16. It will be noticed that in this system there are no floating levers, the cylinder levers being lengthened sufficiently to allow the weight arm to be coupled directly to the truck live lever. It will be noticed, also, that all of the simple levers are of the first class, except the left-hand cylinder lever, which is of the third class, and the two truck dead levers, which are of the second class.

Calculating the Power of the Stevens System.—To calculate the power applied to the brake shoes in this system of levers, proceed as with the Hodge system, bearing in mind what was said in Arts. **59** and **60.** For example, if the brake cylinder exerts a force of 4,700 pounds, a force of

$$\frac{4{,}700 \times 15}{30} = 2{,}350 \text{ pounds}$$

will be exerted at W of the cylinder lever, while the force F on the fulcrum will equal $4{,}700 + 2{,}350 = 7{,}050$ pounds. 2,350 pounds applied to P of the truck live lever will cause a force of

$$\frac{2{,}350 \times 24}{6} = 9{,}400 \text{ pounds}$$

to be exerted at W, while the force on the fulcrum F (the brake shoes) will be $9{,}400 + 2{,}350 = 11{,}750$ pounds. With a force of 9,400 pounds exerted at P of the truck dead lever, a force of

$$W = \frac{9{,}400 \times 30}{24} = 11{,}750 \text{ pounds}$$

will be applied to the brake shoes, while the fulcrum F will be subjected to a force of $11{,}750 - 9{,}400 = 2{,}350$ pounds. The force applied to the other brake shoes can be found in a similar manner.

As regards the leverage of the truck live lever, the last paragraph of Art. **65** applies here also.

67. Cam Driver-Brake.—The following very simple method for determining the braking power developed by a cam driver-brake was invented by Mr. H. A. Wahlert, of the American Brake Company:

Take two pieces of wire of the same diameter and place them between the top and bottom toes of one of the brake shoes and the wheel; then apply the brakes fully and measure the piston travel. Next, release the brakes, recharge fully, and again apply the brakes in full with the wires removed. Measure the piston travel and find how much it increases when the wires are removed. The wires are used to find the relative amount

of travel of the weight arm (the brake shoe) and power arm (the piston); by subtracting the amount of piston travel when the wires are in place from the amount when they are removed, the distance the piston travels while the brake shoe travels the thickness of the wire can be determined. Knowing the relative travel of the brake shoe and piston, and the force developed by the cylinder, the force exerted on one brake shoe can be determined by rule II, Art. **58.** The rule, as applied to this case, may be stated as follows: *The force exerted on one brake shoe of a cam driver-brake is found by multiplying the increase of piston travel* (determined as above) *by the force developed in the brake cylinder* (in pounds), *and dividing the result by the*

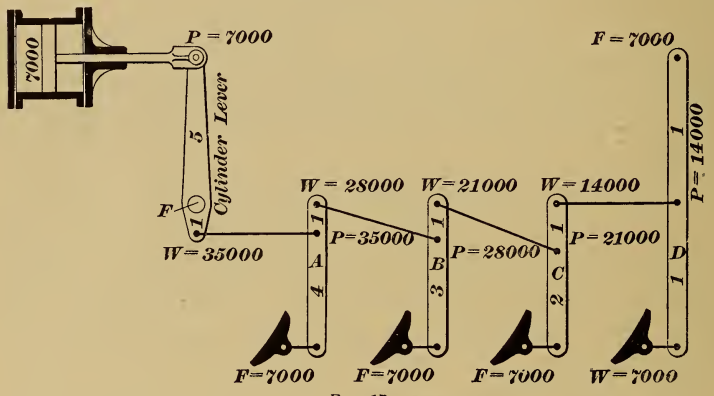

FIG. 17.

diameter (in inches) *of the wire used.* To find the total force exerted on the four shoes, multiply this amount by 4.

As an example of the use of this rule, suppose the diameter of the wires used to be $\frac{1}{8}$ inch, the piston travel with the wires inserted to be 4 inches, and when removed, $4\frac{1}{2}$ inches. In this case the increase in piston travel would be $4\frac{1}{2} - 4 = \frac{1}{2}$ inch. Then, if a total force of 2,500 pounds were developed by the brake cylinder, the force exerted on each brake shoe would be

$$W = \frac{2{,}500 \times \frac{1}{2}}{\frac{1}{8}} = 10{,}000 \text{ pounds.}$$

This would give a total force on the four shoes of $4 \times 10{,}000 = 40{,}000$ pounds.

68. American Outside Equalized Brake.—This type of brake was illustrated in Fig. 2, Art. **55**, and a diagram of it, as applied to an engine having four pairs of drivers, is given in Fig. 17. In a brake of this kind, the levers are so proportioned that the braking power developed at the brake cylinder is distributed equally among the drivers, the force applied to the different brake shoes being maintained equal; hence, the brake is said to be an equalized brake.

In the figure, the cylinder lever is of the first class, while the others are of the third class, the relative lengths of the lever arms being given in each case. The total force developed in the brake cylinder is, say, 7,000 pounds. This will cause a force of

$$\frac{7{,}000 \times 5}{1} = 35{,}000 \text{ pounds}$$

to be exerted at P of lever A, which in turn will cause a force of

$$W = \frac{35{,}000 \times 4}{5} = 28{,}000 \text{ pounds}$$

to be exerted at P of lever B. The force applied at the fulcrum (the brake shoes) of lever A is $35{,}000 - 28{,}000 = 7{,}000$ (see Art. **60**). 28,000 pounds at P of lever B will exert at P of lever C a force of

$$W = \frac{28{,}000 \times 3}{4} = 21{,}000 \text{ pounds},$$

and a force of $28{,}000 - 21{,}000 = 7{,}000$ pounds will be exerted at the fulcrum (brake shoes) of lever B. A force of

$$W = \frac{21{,}000 \times 2}{3} = 14{,}000 \text{ pounds}$$

will be exerted at P of lever D, while $21{,}000 - 14{,}000 = 7{,}000$ pounds will be exerted on the shoes of lever C. 14,000 pounds at P of lever D will exert a force of

$$W = \frac{14{,}000 \times 1}{2} = 7{,}000 \text{ pounds}$$

at the shoes, and $14{,}000 - 7{,}000 = 7{,}000$ pounds at the fulcrum F.

For an engine having two pairs of drivers, the end *W* of the cylinder lever would be connected at *P* of lever *C*, and levers *A* and *B* would not be used. A force of 21,000 pounds would have to be exerted by the cylinder lever to give 7,000 pounds at each brake shoe, so that if the same size cylinder were used, the power arm of the cylinder lever would have to be three times as long as the weight arm.

On an engine having three pairs of drivers, the cylinder lever would be connected to the lever *B*, and would have to exert 28,000 pounds to give 7,000 pounds at each brake shoe; hence, if the brake cylinder were of the same size as that just considered, the power arm of the cylinder lever would have to be four times as long as the weight arm.

BRAKE POWER.

PRESSURES APPLIED TO BRAKE SHOES.

69. In Art. **45** the statement was made that if the frictional resistance exerted between the wheel and the shoe were greater than that exerted between the wheel and the rail, the wheel would slide. With a good rail, these frictional resistances will be practically equal when the force applied at the brake shoe is equal to the pressure of the wheel on the rail, so that the force applied to the brake shoe must be less than the pressure of the wheel on the rail, to insure the wheel against slipping when used under the varying conditions of service. Practical experience has demonstrated that the best results will be obtained by the use of the following as *the maximum safe pressures* on the brake shoes in the different classes of service: For passenger cars, $\frac{9}{10}$, or 90 per cent., of the weight on the rail under the wheel when the car is empty; for freight cars, $\frac{7}{10}$, or 70 per cent., of the weight on the rail when the car is empty; for tenders, 100 per cent., or the entire weight on the rail when the tender is light; for driving wheels, $\frac{75}{100}$, or 75 per cent., of the weight under the drivers when the engine is ready for the road.

CALCULATION OF BRAKING POWER.

70. The method of calculating *the proper braking power* to use in any case is as follows: First find the weight on the rail under each wheel, by dividing the entire weight of the empty car by the number of wheels. Then, if the car is a passenger car, take $\frac{9}{10}$ of this, or, if a freight car, take $\frac{7}{10}$, as the maximum force to be used on each brake shoe. In other words, this is the allowable force per shoe; therefore, the total braking force can be found by multiplying this amount by the number of wheels that are fitted with brakes, and from this the proper proportion of brake levers can be determined.

The sizes of brake cylinders that are used on cars and tenders of different weights are as follows: 6-inch brake cylinders are used on freight cars having a light weight of 15,000 pounds or less; 8-inch cylinders on tenders of 35,000 pounds light weight or less, and also on freight cars whose light weight is between 15,000 and 42,000 pounds; 10-inch cylinders on tenders of over 35,000 pounds light weight, and also on passenger cars of 50,000 pounds or less; 12-inch cylinders on passenger cars whose light weight is between 50,000 and 70,000 pounds; and 14-inch cylinders on passenger cars of over 70,000 pounds.

EXAMPLE.—What is the maximum braking power that should be allowed at each brake shoe of a 72,000-pound passenger car having 6-wheeled trucks, 4 wheels only of each truck being supplied with brakes? Also, what will be the total braking force?

SOLUTION.—If this car weighs 72,000 pounds and has 12 wheels, there will be a pressure of $\frac{72{,}000}{12} = 6{,}000$ pounds on the rail under each wheel; hence, the highest allowable braking force per wheel should be $.9 \times 6{,}000 = 5{,}400$ pounds. The total allowable braking force of the car, therefore, will be $8 \times 5{,}400 = 43{,}200$ pounds, since only 8 wheels are braked.

71. The Force Exerted in the Brake Cylinder.—The total allowable braking force should not be exceeded when an emergency application of the brakes is made, since at such times it is especially important that no wheels slide, as a sliding wheel exerts but little retarding force. For this reason, the

braking power is calculated on the assumption that, in an emergency application, 60 pounds pressure is obtained in the brake cylinder with a quick-action brake, and 50 pounds with a plain triple.

The total force in pounds that a brake cylinder will develop when subjected to 50 and 60 pounds pressure per square inch, has been calculated for several sizes of cylinders, and the results tabulated as follows:

FORCE EXERTED IN BRAKE CYLINDER.

Size of Cylinder. Inches.	With 50 Lb. Pressure.	With 60 Lb. Pressure.
6	1,400	1,700
8	2,500	3,000
10	3,900	4,700
12	5,600	6,800
14	7,700	9,200

The force exerted in a brake cylinder is found by multiplying the area of the piston in square inches by the pressure per square inch in the cylinder. Thus, if the piston has an area of 154 square inches, it will develop a force of $154 \times 50 = 7{,}700$ pounds under a 50-pound pressure.

The area of the piston may be found by multiplying the diameter of the piston (in inches) by itself, and by 11, and dividing the product by 14. Thus, the area of a 10-inch piston is $\frac{10 \times 10 \times 11}{14} = 78\frac{1}{2}$ square inches, about. The areas of various sizes of pistons used in the brake system are as follows: $28\frac{1}{4}$ square inches area in a 6-inch piston, $50\frac{1}{4}$ in an 8-inch, $78\frac{1}{2}$ in a 10-inch, 113 in a 12-inch, and 154 in a 14-inch, piston.

Another, and slightly more accurate, method of calculating the area of a piston is to multiply the diameter (in inches) by itself, and the product by .7854.

THE AIR BRAKE.

(PART 4.)

TRAIN AIR-SIGNALING SYSTEM.

GENERAL ARRANGEMENT OF APPARATUS.

1. The general arrangement of the train **air-signaling apparatus** on an engine, tender, and passenger car is shown in Figs. 1 and 2. This system has gradually taken the place of the old bell-cord-and-gong method of signaling on passenger trains, on account of the ease and certainty with which signals can be transmitted to the engineer from any part of the train.

The engine, tender, and each of the cars are piped with a $\frac{3}{4}$-inch pipe, which is connected between cars by means of hose, so that when all the hose is coupled, the signal-pipe line extends throughout the entire train.

A *car discharge valve*, Fig. 1, is provided on each car. This is usually located outside the car above the door, as shown in the figure, and is piped to the train signal pipe. Sometimes, however, it is placed inside the car above the door, to guard against the valve being clogged in winter. The former position is preferable, however, as the chances of clogging are small, and the annoyance caused by the sharp sound of discharging air every time the valve is opened to make signals is avoided.

A signal cord is attached to the lever of the discharge valve, and one end extends across the platform and is fastened in a suitable manner to the hood, while the other end extends through the car and is fastened to the hood on the other end of the car. This cord enables the discharge valve to be operated from any part of the car.

The air-signal apparatus on the engine, Fig. 2, consists of the *signal valve*, *signal whistle* and *pressure-reducing valve*. A $\frac{3}{8}$-inch pipe leads from the main reservoir to the reducing valve, and thence leads to, and connects with, the **T**-fitting *s* in the

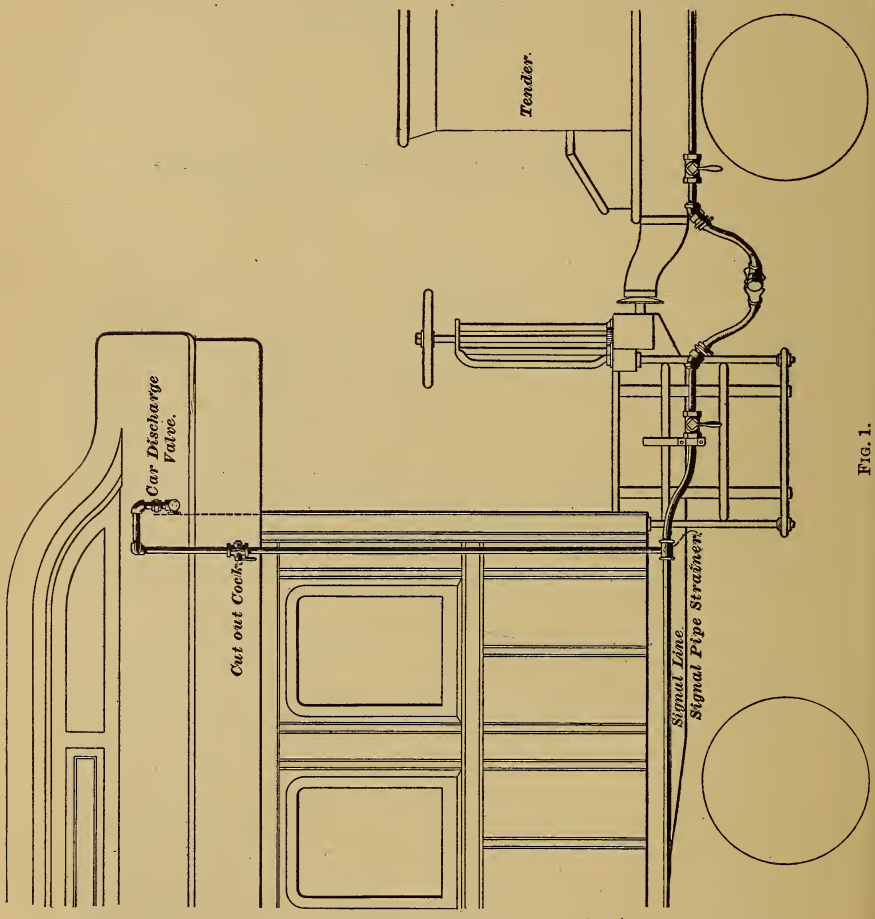

FIG. 1.

signal pipe. Air from the main reservoir can thus pass through the pressure-reducing valve and thence into the signal pipe and signal valve, but at a reduced pressure. A pressure of 40 pounds with the improved valve, and 25 with the old valve, is

usually maintained in the signal system, and the duty of the reducing valve is to diminish the pressure from 90 pounds

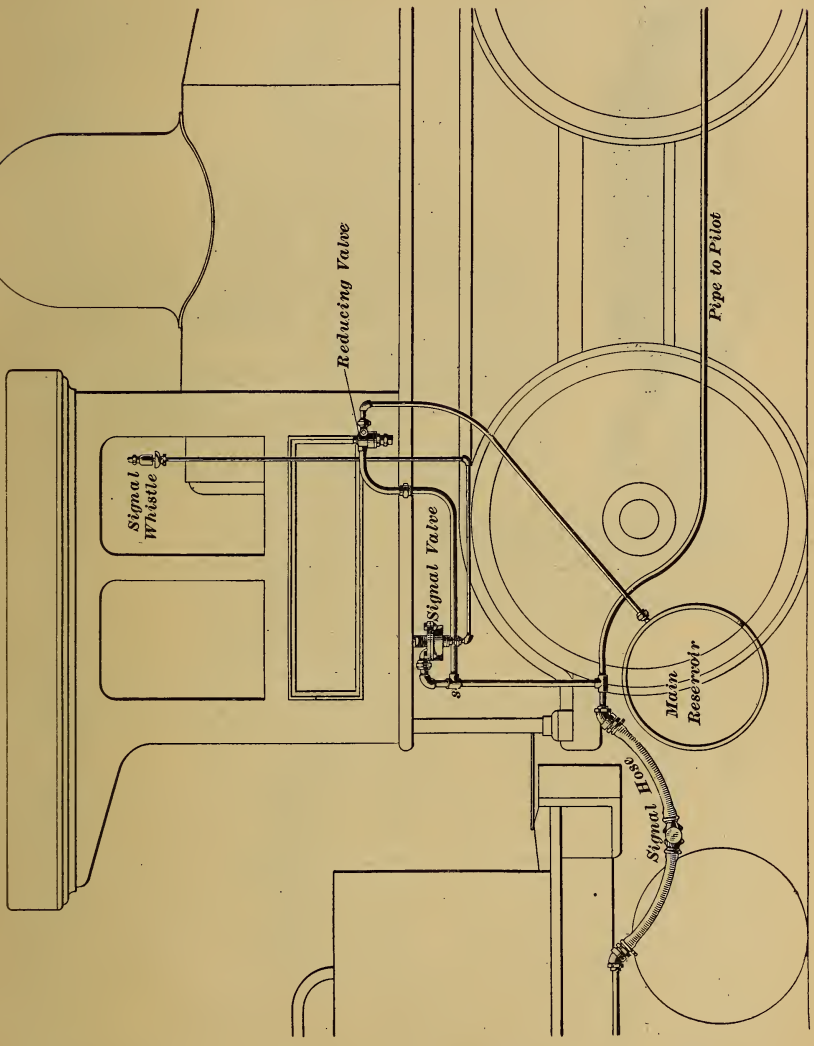

FIG. 2

(main-reservoir pressure) down to the required pressure for use in the signal system.

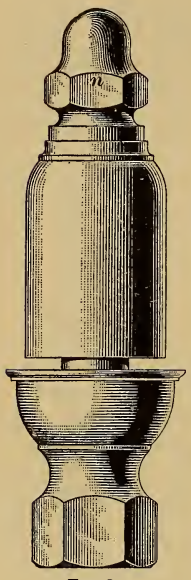

FIG. 3.

The **signal whistle,** Fig. 3 (a small whistle located in the cab, as close to the engineer as practicable), is piped to the signal valve, and it is the operation of the latter that causes the whistle to blow.

When the conductor wishes to transmit a signal to the engineer, he gives the signal cord in one of the cars a pull. This opens the car discharge valve on that car and allows some of the air in the main signal line to escape to the atmosphere, thus reducing the signal-pipe pressure. The reduction in pressure operates the signal valve on the engine, which, consequently, discharges a small quantity of air through the signal whistle in the cab, thus causing it to sound a short blast. Each time the cord is pulled, the signal whistle gives a blast.

DESCRIPTION OF APPARATUS.

REDUCING VALVE (OLD STYLE).

2. Although this style of **reducing valve,** Fig. 4, has been superseded to a great extent by the improved valve, there are still a sufficient number in use to warrant a description of them being given here.

The main-reservoir connection is made at *X*, while a pipe leads from *Y* to the signal pipe. *4* is the supply valve that regulates the admission of air to the signal system; it is operated by the stem of the reducing-valve piston *8* and by the supply-valve spring *10*. *7* is the rubber diaphragm; *6*, the diaphragm ring; and *9*, the regulating spring. In this style of valve, the spring *9* was made strong enough to just resist a pressure of 25 pounds per square inch in chamber *B*. In some instances, however, it has been replaced by a spring that requires 40 pounds pressure per square inch to compress it. The outlets *e*, *e*, in the cap *3* prevent air (due to leakage)

from accumulating back of the piston and piston stem and rendering the valve inoperative.

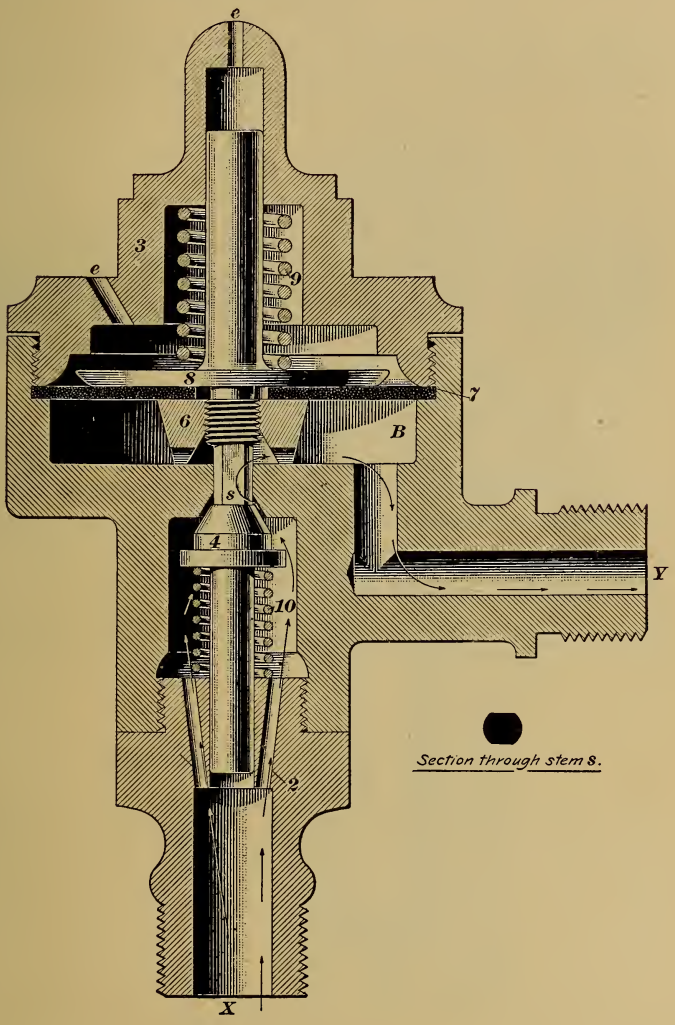

FIG. 4.

3. Operation of Valve.—The operation of this valve is as follows: The spring *9*, acting on the piston *8*, causes the stem of the piston to hold supply valve *4* from its seat, so that

main-reservoir air entering at *X* is free to pass through the passages *2*, *2*, past valve *4* and into chamber *B*, and thence through the outlet *Y* to the signal line. This increases the pressure in the signal pipe and chamber *B* until it reaches 25 pounds per square inch, when the diaphragm *7* and piston *8* are forced upwards against the action of the spring *9*. The supply-valve spring *10* then forces the supply valve to its seat, and prevents the further passage of air from the main reservoir to the train pipe. As long as the pressure in chamber *B* remains at 25 pounds, spring *9* will be compressed and the supply valve will remain closed. Any reduction of pressure in chamber *B*, however, will cause the regulating spring to force the diaphragm *7* and piston *8* downwards, thus forcing the supply valve from its seat and allowing sufficient air to pass to the signal pipe to again raise its pressure to 25 pounds, when the supply valve will close. The old-style valve has no regulating nut by means of which the tension of the regulating spring can be adjusted to alter signal-pipe pressure. If it is necessary to increase the signal-pipe pressure, the regulating spring *9* will have to be replaced by one that is stiffer; or a couple of washers may be placed in the cap nut, the effect of which will be to compress the spring more, and thus make it offer a greater resistance to the upward motion of piston *8*.

REDUCING VALVE (IMPROVED).

4. The **improved reducing valve** is shown in Fig. 5; *2* is a plug cock which, in the position here shown, is allowing air to enter the reducing valve, but, when turned at right angles to its present position, cuts the valve out of service; *3* is the lower cap; *4*, the supply valve; *5*, the supply-valve cap nut; *6*, the supply-valve spring; *7*, the reducing-valve piston; *8*, a rubber diaphragm consisting of two pieces of rubber; *9*, the regulating spring; *10*, the diaphragm ring; *11*, the piston packing-ring (which, together with the diaphragm, serves to prevent leakage of air past piston *7*); *14*, the regulating nut by means of which the tension of the spring *9* is adjusted; and *15*, the

check-nut. The passage *e* is to allow any air leaking past the piston *7* to escape to the atmosphere.

5. Operation of Valve.—The tension of the regulating spring *9* is adjusted to just withstand a pressure of 40 pounds

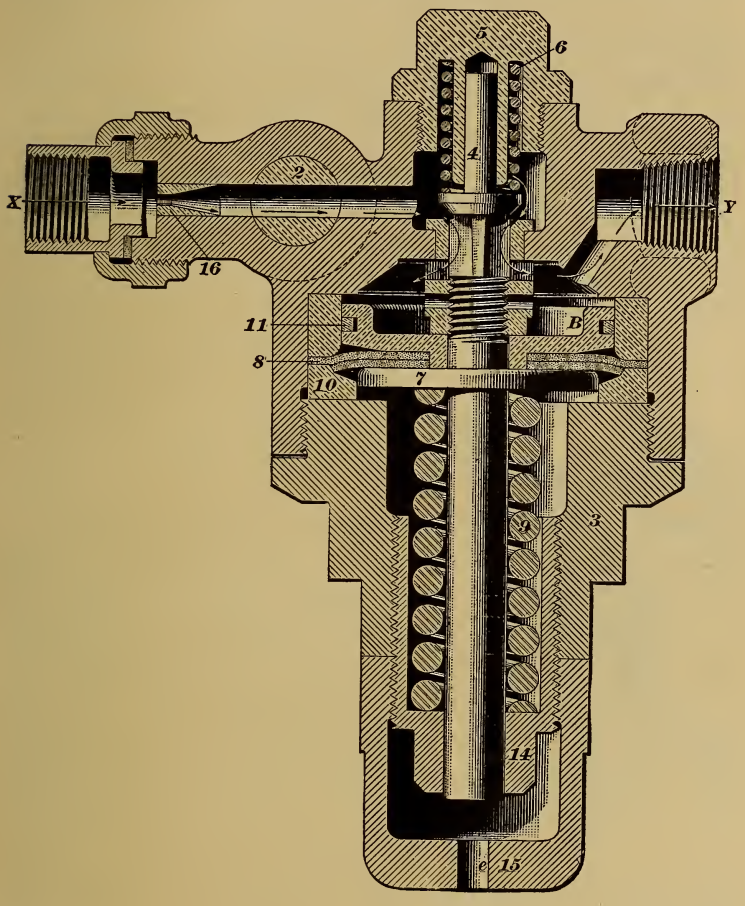

FIG. 5.

per square inch in chamber *B*. When the pressure is less than this amount, the spring *9* forces piston *7* upwards and the piston stem unseats the supply valve *4*. Main-reservoir air (entering at *X*) is then free to pass through the plug cock *2*,

supply valve *4*, and thence out through *Y* to the signal pipe. As soon as the pressure in the signal pipe and chamber *B* reaches 40 pounds, piston *7* is forced downwards and the spring *6* then forces the supply valve to its seat, closing communication between the main reservoir and the signal pipe. Any reduction in signal-pipe pressure will allow the spring *9* to force piston *7* upwards, thus opening the supply valve again. The valve then remains open until the signal-pipe pressure is again raised to 40 pounds, when it closes. The reducing valve should be placed in the cab, in some moderately warm place, if possible, so as to prevent its freezing in cold weather.

With the improved valve, the signal-pipe pressure may be increased by screwing up the regulating nut *14*, or decreased by unscrewing this nut.

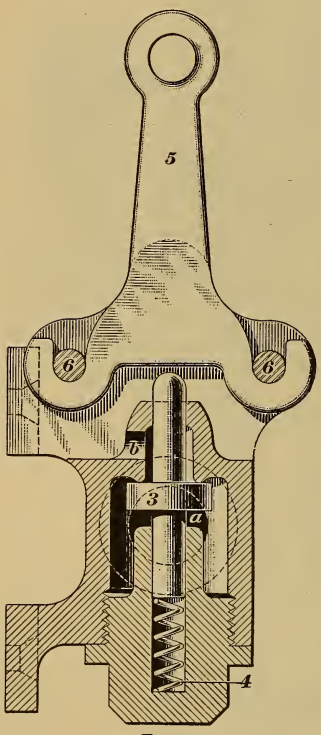

FIG. 6.

CAR DISCHARGE VALVE.

6. A sectional view of the **car discharge valve** is shown in Fig. 6, in which *3* is the discharge valve, and *4* the discharge-valve spring that holds this valve up against its seat. *5* is the lever or handle to which the signal cord is attached, while *6*, *6* are stop-pins. There is a union connection at *a* to which the branch pipe from the signal pipe is connected, while the exhaust port *b* leads to the atmosphere.

7. Operation of Valve.—When the signal cord on either side of the discharge valve is pulled, the lever *5* is caused to strike the stem of the discharge valve *3* and force the valve

from its seat. Air from the signal pipe then passes up through the branch pipes and out to the atmosphere through the union connection *a* and the port *b*, causing a reduction in signal-pipe pressure. As soon as the signal cord is released, the spring *4* forces the discharge valve to its seat again and stops the discharge of air from the signal pipe.

Referring to Fig. 1, it will be seen that the branch pipe to the discharge valve is supplied with a strainer (where it connects with the main signal pipe) and a cut-out cock, the former to prevent dirt from reaching the discharge valve, and the latter to enable the discharge valve to be cut out in case it is disabled. The handle of the cut-out cock stands parallel with the pipe when the discharge valve is cut out, and at right angles to it when cut in. Also, the cut-out cocks in the signal pipe on either side of the signal hose are closed when the handles stand parallel with the pipe, and open when at right angles to it.

THE SIGNAL VALVE.

8. The **signal valve,** Fig. 7, is located under the footboard of the cab, and may be placed either on the engineer's or the fireman's side. The signal pipe is connected to it at *X*, while a pipe leads from *Y* to the signal whistle. The valve body is divided into two chambers *A* and *B* by the rubber diaphragm *12*, which also is attached to and operates the diaphragm stem *10*. This stem extends through the bushing *9*, and its end forms a valve (with seat in bushing *7*) that controls the passage *e* leading to the whistle. A small portion of the stem *10* fits the bushing *9* rather snugly, while below this a groove *f* is cut around the stem. Below this groove the stem is milled out so as to have a cross-section like that shown at *x*.

9. Operation of Valve.—When the signal pipe is being charged, air enters the signal valve at *X*, and, passing through the small port *d*, charges chamber *A*. It also passes through the passage *c c*, and feeds up slowly past the stem *10* into chamber *B*, charging this to the same pressure as chamber *A*. The pressures in chambers *A* and *B* and the signal pipe are equal when the pipe is fully charged.

When the signal cord is pulled and a reduction is made in the signal pipe, it causes a reduction of pressure in the signal valve also; but, since the stem *10* makes a rather snug fit, the pressure in chamber *A* above the diaphragm reduces faster than the pressure in chamber *B*; consequently, the diaphragm is forced upwards, and raises the stem *10*, thus opening the

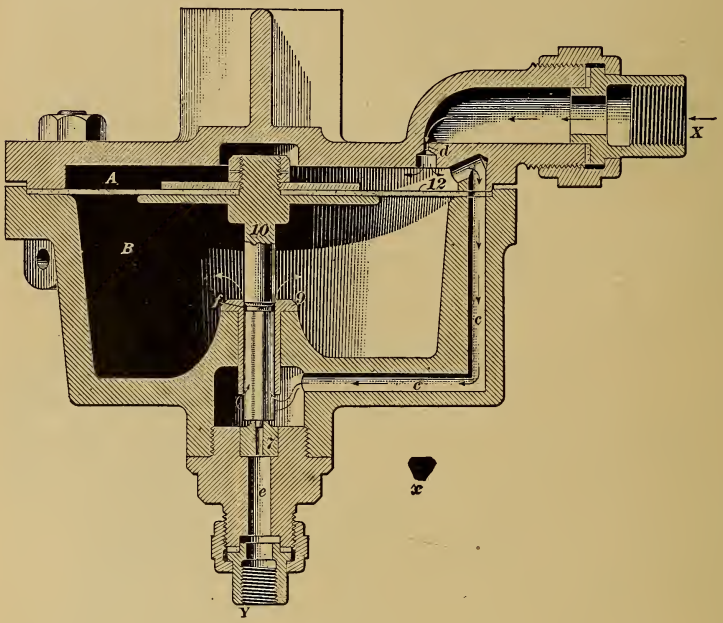

FIG. 7.

exhaust valve in *7*. The stem *10* is lifted until the groove *f* is above the bushing *9*, when the air in chamber *B* escapes quickly through the groove *f*, the milled spaces in the stem *10*, and the passage *e*, out to *Y* and the whistle, causing the latter to give a blast. Air also escapes from chamber *A* to the whistle, through the passages *c c* and *e*.

The same reduction of pressure that operates the signal valve also opens the reducing valve, allowing air from main reservoir to flow into, and raise the pressure in, the signal line. This increase of pressure, following the closing of car discharge valve,

and immediately after the reduction in signal valve, increases the pressure in chamber *A* faster than in chamber *B*, thus forcing the diaphragm downwards, closing the valve leading to passage *e*, and stopping the blast of the whistle.

SIGNALING.

10. In **transmitting signals** by means of the air-signaling system, certain precautions must be observed in order to obtain good results. For each blast of the whistle, the car discharge valve should be held open just long enough to reduce the pressure in the signal pipe clear up to the signal valve on the engine, when it should be closed. It should then be allowed to remain closed until the pressure has equalized throughout the system, before it is again opened to transmit another signal. If the discharge valve is opened a second and, possibly, a third time before the whistle has ceased to blow due to the first reduction, the whistle will give one long blast instead of two or three short ones, as intended. If it is opened a second time before the pressure has fully equalized in the signal pipe, the whistle will give a blast after each discharge, but the last blast will be weak on account of the pressure being less than 40 pounds.

In transmitting signals, the best results will be obtained if the car discharge valve is allowed to remain closed from 2 to 3 seconds between blasts, depending on the length of the train. In other words, for each blast, pull the signal cord straight downwards and hold the discharge valve open for 1 second; then allow from 2 to 3 seconds for the pressure to equalize throughout the signal pipe before it is again opened for another blast.

DEFECTS IN THE SIGNALING SYSTEM.

11. Although there are but comparatively few parts in the air-signaling system, it requires good judgment to locate defects that cause incorrect signals to be given. Also, it should be borne in mind that it is not so much the *amount* of the reduction as the *rapidity* with which it is made, that causes the whistle to blow.

SIGNAL PIPE FAILS TO CHARGE.

12. If it is found that no air passes into the signal pipe, first see whether the cocks on each side of the hose between the tender and train have been opened. If so, the opening in the plug *16* of the reducing valve, Fig. 5, may be stopped up with oil and dirt; or the lining in the hose may be loose and blocking the passage; or, if the weather is cold, the signal pipe on the engine or tender may be stopped up with ice, or the reducing valve may be frozen up.

NO EXHAUST FROM DISCHARGE VALVE.

13. If no exhaust occurs at the discharge valve when the signal cord is pulled, the signal pipe being properly charged, the trouble may be due to the cut-out cock, Fig. 1 (usually placed in the saloon), being turned so as to cut out the discharge valve.

WHISTLE FAILS TO BLOW.

14. If an exhaust occurs at the discharge valve when the signal cord is pulled, but the signal whistle fails to give a blast, the trouble may be due to the strainer in the **T**, where the branch pipe connects with the signal pipe, being stopped up (see Fig. 1). In this case, the exhaust may sound all right, since there is considerable air in the branch pipe between the strainer and the discharge valve, but the air in the main pipe cannot get past the strainer fast enough to make a sufficiently quick reduction to operate the signal valve. If the trouble is not in the strainer, it may be that (1) port *d* of the signal valve is stopped up, in which case no air can enter the valve to charge it; (2) stem *10* of signal valve has worn sufficiently loose in bushing *9* to allow pressure in chamber *B* to reduce about as fast as that in chamber *A*; (3) the signal-valve diaphragm is bagged or, possibly, cracked; (4) the bell of the signal whistle is imperfectly adjusted or its bowl is full of dirt; (5) whistle is so situated that wind blowing across the bowl prevents it from sounding; or (6) dirt in port of bushing *7*.

If poor rubber is used in the diaphragm, or if oil gets on it, the rubber will, in time, stretch and bag. In that event, when a signal-pipe reduction is made, the diaphragm will respond to it without raising the stem *10* from its seat in *7*, and no blast will result. An overheated air pump also tends greatly to heat the rubber and buckle or distort the diaphragm. In some cases, the diaphragm cracks, causing chambers *A* and *B* to become directly connected.

WHISTLE GIVES ONE LONG BLAST.

15. If, in transmitting a signal, the whistle simply gives one long blast, it may be due either to the reductions being made too close together, or to the diaphragm stem *10* of the signal valve working stiffly in the bushing *9*, in which event the passage at *e* would remain open until a sufficient difference of pressure existed in chambers *A* and *B* to force the stem *10* to its seat.

WHISTLE BLOWS WHEN BRAKES ARE RELEASED.

16. If the whistle blows every time the brakes are released, it indicates that there is direct connection between the main reservoir and signal pipe, and that the latter is charged to main-reservoir pressure. This may be due either to valve *4* of the reducing valve being held open by dirt on its seat, or to there being too much tension in the spring *9*; or, in the old-style reducing valve, Fig. 4, to the spring *10* being broken or too short, so that it does not force valve *4* to its seat.

The reason why the whistle blows when the brakes are released is as follows: Since there is a direct opening between the signal pipe and the main reservoir, air will flow from the former to the latter every time the main-reservoir pressure is reduced in releasing the brakes. This causes a reduction of signal-pipe pressure right at the signal valve, which, if the opening through the reducing valve is large enough, and the main-reservoir pressure is reduced sufficiently fast, will operate the signal valve and cause the whistle to give a blast. If the opening through the reducing valve is small, the whistle

may not sound if the signal pipe is long, whereas it may do so on a very short train or on a lone engine.

Main-reservoir pressure in the signal pipe can be detected from the train by a stronger discharge of air from the discharge valve when the signal cord is pulled; on the engine it will be indicated by the signal whistle screeching, due to the fact that the bell of the whistle is adjusted for 40 pounds pressure and not for 90.

OTHER DEFECTS.

17. Sometimes the whistle only gives a *weak blast* when the cord is pulled. This may be due to the regulating spring of the reducing valve being too weak, so that there is less than 40 pounds in the signal pipe; the whistle may be full of dirt or be improperly adjusted; or the passage through the bushing *7* in the signal valve, Fig. 7, may be partly stopped up with oil and dirt.

The bell of the signal whistle, Fig. 3, may be adjusted by loosening the locknut *n* and unscrewing or screwing up the bell, as the case may require.

If, in the signal valve, Fig. 7, the valve formed by the end of the stem *10* leaks or is held from its seat on bushing *7* by dirt, there will be a constant blow at the whistle that will produce a singing noise.

A *leaky* car discharge valve, due either to dirt on the seat of the valve or to a defective valve seat, is a common source of trouble. If dirt on the valve seat is the cause of the leak, opening and closing the valve will sometimes remedy it by blowing the dirt off.

The accuracy with which signals can be transmitted depends, to a considerable extent, on the fit of the stem *10* in the bushing *9*. If it makes too tight a fit, the whistle will give one long blast instead of the usual short ones, as already explained. Also, signal-pipe leakage is liable to operate the signal valve and cause the whistle to sound a blast, and the signal valve will not respond to a short, quick reduction.

If the fit of the stem is too loose, the signal valve will not be affected by leaks; neither will it respond to a light, quick

reduction in signal pressure. Also, when the train is short, the signal valve will respond to a reduction made on any of the cars in the train, but, on a long train, a reduction from the rear cars may not be sufficiently rapid at the signal valve to operate the valve, and the whistle will not sound. Then, again, the whistle is liable to give two or three blasts when the cord is pulled, if the stem is too loose. This is brought about as follows: When this cord is pulled, a reduction is made in the signal valve above the diaphragm, which causes the diaphragm to be raised, thus allowing air to escape from chamber *B* (below the diaphragm) to the whistle, causing it to give a blast. The reducing valve being opened by same reduction, admits air into signal pipe and chamber *A*, causing the valve to seat in bushing *7* before pressures above and below diaphragm equalize. When the stem fits properly, the pressure in the chamber above the diaphragm increases much faster than that in the chamber below it; hence, the diaphragm is held down and a second blast does not occur. When the stem fits loosely, however, both chambers charge at more nearly the same rate, and, the diaphragm being in a state of vibration, the rapid increase of pressure below the diaphragm will cause it to rebound, as it were, thus raising the stem and causing the signal whistle to give a second blast. In case the signal whistle gives two blasts when the cord is pulled, it can be remedied by lowering the stem *10* in the bushing *9*. The length of fit of the stem in its bushing should never be less than $\frac{1}{32}$ inch, nor more than $\frac{1}{16}$ inch, measuring from the top of groove *f* to the top of bushing *9*.

TERMINAL TEST OF AIR-SIGNAL APPARATUS.

18. In making up a train, the air-signal hose should be connected up at the same time the train-line hose is, and all the signal-line cocks opened except the rear cock on the last car of the train; this should be closed, and the signal hose hung up properly. While looking the train over for leaks, the signal hose and couplings and also the car discharge valves should be inspected to see if they are in good condition. If a discharge valve is found to be leaking, jerk it open a few times; if this

does not remedy the leak, the valve will have to be reseated with a new gasket. If a discharge valve is found to be defective while on the road, it should be cut out by closing the cut-out cock in the branch pipe. The conductor should then be notified, and he should report the same for repairs at the end of the run. In testing the signal system, signals should be transmitted from the rear car of the train, from a car in the center, and also from the car next to the engine.

TESTING DEVICE.

19. The device about to be described has been used very successfully in testing for, and locating, defects in the signaling apparatus, and it ought to be more widely used than it is. It consists simply of an air gauge, a single-line hose, and a small petcock, the cock having a $\frac{1}{8}$-inch hole through its plug. The hose is fitted with a coupling, but has no nipple, the air gauge being connected to its nipple end. A hole is drilled through the coupling into the air space and tapped, and the petcock screwed into it.

When this device is coupled into the signal pipe, the signal-pipe pressure will be indicated by the air gauge, while, by means of the petcock, a reduction of any amount or duration may be made in the signal-pipe pressure.

20. Using the Device.—The **testing device** may be used to determine the condition of the automatic reducing valve, as follows: First connect the device into the signal pipe and charge the latter to standard pressure; then open the petcock wide, make a 10-pound reduction, and note the time required to raise the pressure to standard again. If the pressure rises slowly and the reducing valve is of the improved type, the passage through the valve is probably reduced by gum and dirt, and the valve should be thoroughly cleaned. If the reducing valve is of the old style, it may be that the supply valve does not open sufficiently to admit of its feeding faster, and the valve should be taken down and repaired.

To test the signal valve make a slow, gradual reduction of about the same magnitude as the leaks in the signal pipe would

amount to; then gradually increase the rate of discharge until the signal whistle blows. If the whistle blows when a slow, gradual reduction is being made, it indicates that the stem *10* makes too tight a fit in the bushing *9*, and that the pressure on the under side of the diaphragm cannot escape as the pressure above is reduced. The consequence is that the pressure in chamber *B* raises the diaphragm as soon as a sufficient difference of pressure is established between the chambers on either side of the diaphragm, and air discharges into the whistle, causing it to sound. If the whistle blows when a quick, heavy reduction is made, but will not do so with a quick, light reduction, the indications are that the stem *10* fits too loosely in the bushing *9*.

THE HIGH-SPEED BRAKE.

HIGH-SPEED SERVICE.

21. It is the *average* speed of a train between terminals that determines the service to which the train belongs. A high-speed train is one that makes a high average speed; hence the conditions of its operation must necessarily differ very materially from those of an ordinary express train. The express train may make an average speed of 35 to 40 miles an hour, while the average speed of the high-speed train may be 60 miles or more. The express train may attain a maximum speed for a short distance that is considerably greater than that attained by the high-speed train, but certain parts of the run that are comparatively safe are chosen for these bursts of speed. The high-speed train, on the other hand, must maintain a high rate of speed throughout the run, regardless of whether passing through yards or over bridges, switches, etc., so that the chances of having to make emergency applications of the brake are much greater than in ordinary service. Also, it is much harder to stop a train when traveling at high speed, and a greater distance is necessary in which to do so.

It has been found that, under the same conditions, the distance required to stop a train traveling at the rate of 40 miles

an hour is about twice as great as when traveling 30 miles; at 50 miles an hour, between three and four times the distance is required; while at 60 miles, about five times the distance is necessary. Hence, since emergencies are more liable to occur with high speeds, and since the distance in which a train can be stopped increases very greatly with its speed, it has become imperative that a more powerful brake than the quick-action one be employed on trains in high-speed service; the present *high-speed brake* is the direct result of this necessity.

The Westinghouse-Galton experiments, made in England in 1878, and the more recent experiments of the Master Car Builders' Association of this country have demonstrated: (1) that the friction exerted between the wheel and the rail is practically constant at all speeds; (2) that the friction exerted between the brake shoe and the wheel is very much less at high than at low speeds, being only $\frac{1}{3}$ as great at a speed of 55 miles per hour as it is when the wheels are only just moving; (3) that on account of this reduction of frictional resistance at high speed, a considerably greater pressure can be applied to the brake shoe when the speed is high, without danger of sliding the wheels; and (4) that in order to make a brake shoe exert as great a retarding force at high as at low speeds, it must be subjected to a greater pressure at high speeds.

The high-speed brake was made to conform with all these requirements, since it provides a very high cylinder pressure when the brake is first applied in emergency, and gradually reduces the pressure until it is low enough at slow speeds to avoid sliding the wheels.

GENERAL ARRANGEMENT OF APPARATUS.

CHANGES NECESSARY IN CAR EQUIPMENT.

22. The general arrangement of the apparatus of the **high-speed brake** on an engine, tender, and passenger car, is shown in Fig. 8. It is here seen that the apparatus and its general arrangement is practically the same as that of the quick-action automatic brake, but that the former contains a few

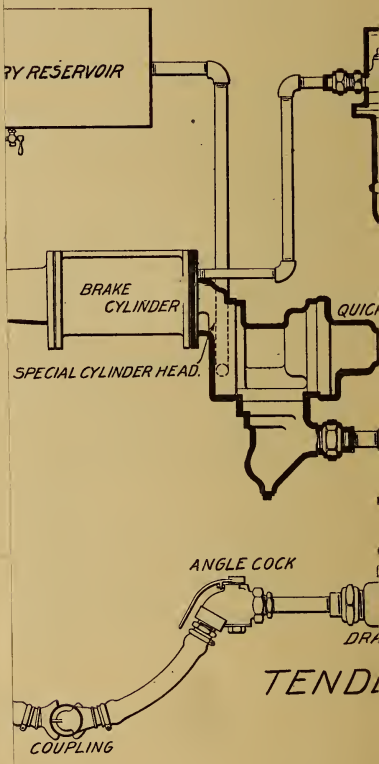
RY RESERVOIR
BRAKE CYLINDER
SPECIAL CYLINDER HEAD.
ANGLE COCK
COUPLING
TEND

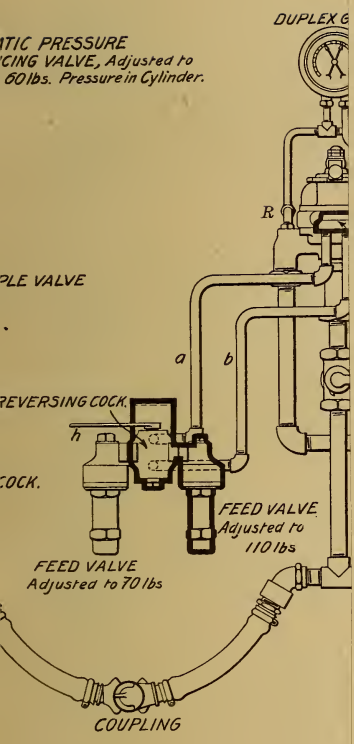
ITIC PRESSURE
CING VALVE, Adjusted to
60 lbs. Pressure in Cylinder.
DUPLEX G
R
PLE VALVE
a
b
REVERSING COCK.
h
COCK.
FEED VALVE
Adjusted to
110 lbs
FEED VALVE
Adjusted to 70 lbs
COUPLING

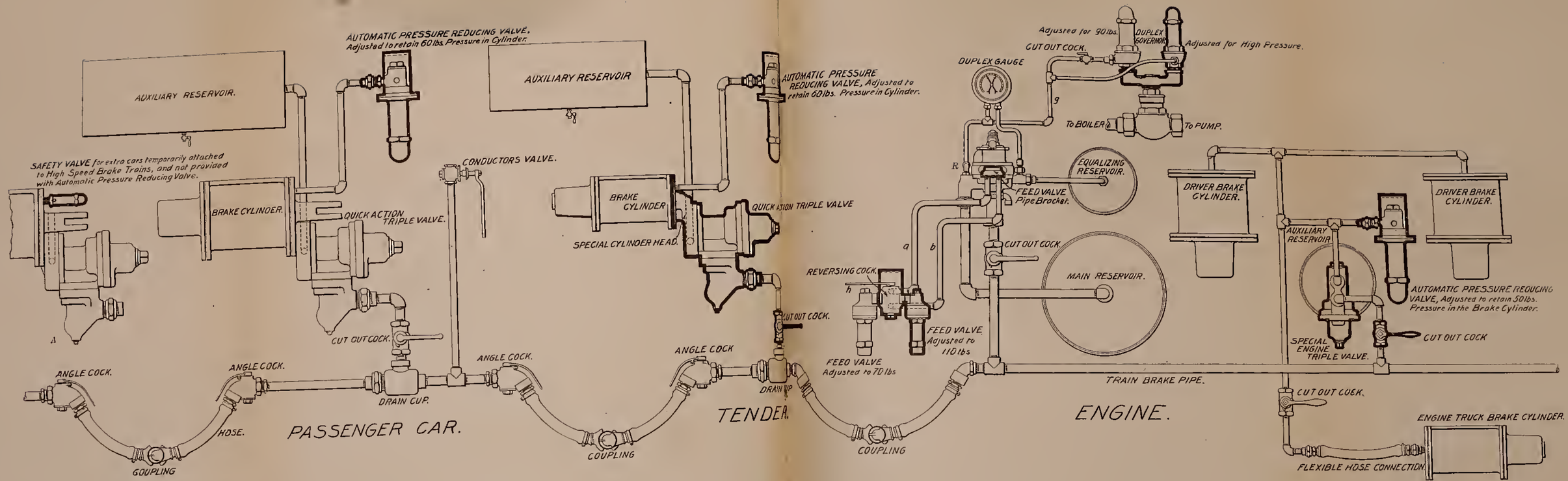
AUXILIARY RESERVOIR.
AUTOMATIC PRESSURE REDUCING VALVE. Adjusted to retain 60 lbs. Pressure in Cylinder.
SAFETY VALVE for extra cars temporarily attached to High Speed Brake Trains, and not provided with Automatic Pressure Reducing Valve.
BRAKE CYLINDER.
QUICK ACTION TRIPLE VALVE.
CONDUCTORS VALVE.
CUT OUT COCK.
ANGLE COCK.
ANGLE COCK.
DRAIN CUP.
HOSE.
GOUPLING
PASSENGER CAR.
AUXILIARY RESERVOIR
AUTOMATIC PRESSURE REDUCING VALVE, Adjusted to retain 60 lbs. Pressure in Cylinder.
BRAKE CYLINDER
SPECIAL CYLINDER HEAD.
QUICK ACTION TRIPLE VALVE
CUT OUT COCK.
ANGLE COCK
ANGLE COCK.
DRAIN CUP
COUPLING
TENDER.
Adjusted for 90 lbs.
DUPLEX GOVERNOR
Adjusted for High Pressure.
CUT OUT COCK.
DUPLEX GAUGE
To BOILER
To PUMP.
EQUALIZING RESERVOIR.
FEED VALVE Pipe Bracket.
CUT OUT COCK.
MAIN RESERVOIR.
REVERSING COCK.
FEED VALVE Adjusted to 110 lbs
FEED VALVE Adjusted to 70 lbs
COUPLING
TRAIN BRAKE PIPE.
ENGINE.
DRIVER BRAKE CYLINDER.
DRIVER BRAKE CYLINDER.
AUXILIARY RESERVOIR
AUTOMATIC PRESSURE REDUCING VALVE, Adjusted to retain 50 lbs. Pressure in the Brake Cylinder.
SPECIAL ENGINE TRIPLE VALVE.
CUT OUT COCK
CUT OUT COCK.
ENGINE TRUCK BRAKE CYLINDER.
FLEXIBLE HOSE CONNECTION.

Fig. 8.

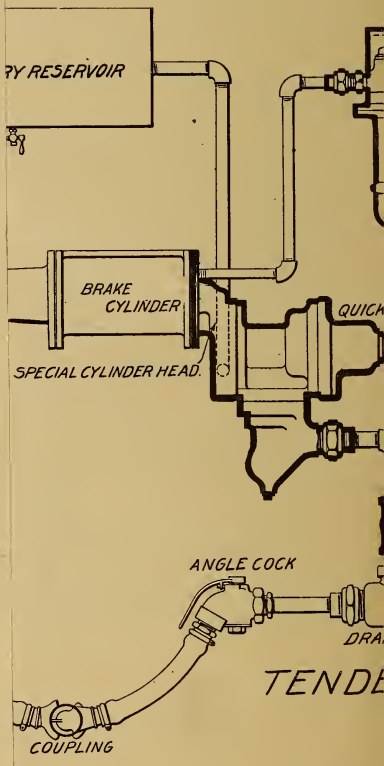
RY RESERVOIR
BRAKE CYLINDER
QUICK
SPECIAL CYLINDER HEAD
ANGLE COCK
DRA
TENDE
COUPLING

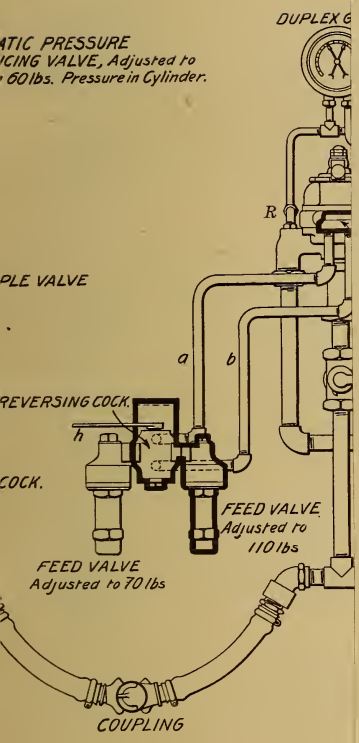
ATIC PRESSURE
ICING VALVE, Adjusted to
60 lbs. Pressure in Cylinder.
DUPLEX G
R
PLE VALVE
a
b
REVERSING COCK.
h
COCK.
FEED VALVE
Adjusted to
110 lbs
FEED VALVE
Adjusted to 70 lbs
COUPLING

pieces of apparatus not employed in the latter, these special pieces being shown heavily lined in the figure. For instance, the only difference in the equipment of a high-speed and a quick-action brake, as applied to a *passenger car*, is the addition, in the former, of an automatic reducing valve, together with sufficient pipe to connect it to the brake cylinder. Also, in the high-speed brake every wheel on the car is fitted with the brake.

A, Fig. 8, illustrates the use of a small *safety valve* that may be attached to extra cars not fitted with the regular automatic reducing valve when they are to be temporarily attached to high-speed brake trains. This valve is simply intended to temporarily take the place of an automatic reducing valve, and it should not be used as a permanent fixture.

CHANGES NECESSARY IN ENGINE EQUIPMENT.

23. General Remarks.—The chief changes necessary to transform the ordinary quick-action brake into a high-speed brake, are made in the engine equipment. In the first place, the engine-truck wheels, as well as the drivers, are supplied with brakes in the high-speed system, as, by so doing, a gain of about 10 per cent. in the braking power can be made; this is not usually done with the quick-action brake. It will be observed that the engine-truck brake cylinder is connected with a flexible hose connection to its branch pipe. This is necessary, since the cylinder is fastened rigidly to, and therefore turns with, the engine truck.

The engine is also supplied with a triple valve of special design that operates both the driver and engine-truck brakes, a cut-out cock in the branch pipe being necessary for the purpose of cutting out the valve in case of accident to driver brake. The engine-truck brake has a separate cut-out cock, so that it can be cut out without interfering with the driver brake. An automatic reducing valve is connected to the pipe that leads from the triple valve to the brake cylinders, thus performing the work of three separate reducing valves connected one to each brake cylinder.

In the tender equipment, a quick-action triple valve is used in place of the plain triple employed with the ordinary automatic tender brake, and an automatic reducing valve is attached to the tender cylinder. In order to attach the quick-action triple to the tender cylinder, it is necessary to use a special cylinder head, and, since the quick-action triple does not contain a cut-out cock, one must be placed in the branch pipe leading to it.

24. Duplex Governor.—The ordinary form of pump governor is replaced by a *duplex governor*, and the feed-valve attachment on the brake valve is replaced with a *pipe bracket* that enables a *duplex feed-valve attachment* to be used. Both the duplex governor and duplex feed-valve attachment really consist of two ordinary instruments combined for the sake of cheapness and convenience, and each duplex instrument could be replaced with two regular instruments of the same kind. Both governors of the duplex pump governor are connected with, and are therefore operated by, main-reservoir pressure, since the pipe *g* leads to the main-reservoir connection on the brake valve. The regulating spring of one is adjusted to just withstand a pressure of 90 pounds per square inch on the governor diaphragm; the regulating spring of the other is adjusted for a higher pressure—about 120 pounds per square inch. A cut-out cock is placed in the pipe to the low-pressure governor, so that if the engine is to be used with a high-speed brake, it can be closed, thus cutting out the low-pressure governor and allowing the high-pressure one to govern the air pump. The cut-out cock is closed when the handle stands at right angles to the pipe, and open when the handle is parallel with it. If the engine is used with the ordinary quick-action brake, the cut-out cock is opened and the pump is then governed by the low-pressure governor, as will be explained later.

25. Feed Attachment.—The two valves of the **duplex feed-valve attachment** are adjusted for different pressures. The regulating spring of the one is adjusted so as to just withstand a train-line pressure of 70 pounds per square inch, while the spring of the other is adjusted to about 110 pounds per square inch. The mechanism of each valve is exactly like the

mechanism of the valve shown in Fig. 17, and explained in connection with the F-6 brake valve in Part 1. The feed-valves are secured to the body of the reversing cock, and the passage *i* of each is connected with the pipe *b* by means of a chamber in the reversing cock. Also, the passage *f''* of both valves is connected with the pipe *a* by means of another chamber, and the cock is so constructed that the right-hand feed-valve can be cut out of, or into, service by means of the handle *h*. When the engine is coupled to a train equipped with ordinary quick-action brakes, the feed valve that is adjusted to 70 pounds is used, and the other one is cut out. When the engine is coupled to a train equipped with the high-speed brake, the high-pressure feed valve is cut into service.

There are two positions in which the handle *h* of the reversing cock may stand. The one shown is the position used when the engine is to be coupled to a train having the ordinary quick-action brake. In this position, the feed-valve that is adjusted for 110 pounds is cut out, and the train-line pressure is regulated to 70 pounds per square inch by means of the other feed-valve. If the engine is to be coupled to a high-speed brake system, the handle of the reversing cock is moved around to the right into the second position. This cuts into service the feed-valve that is adjusted for 110 pounds, and the train-pipe pressure is then regulated to that amount. This duplex feed-valve is usually placed under the running board of the engine.

OPERATION OF APPARATUS.

AUTOMATIC REDUCING VALVE.

26. Description.—In Fig. 9 are given various sectional views of the **automatic reducing valve,** (*a*) representing a side view with half of the valve removed, while (*b*) is a horizontal cross-section taken through the slide valve, and viewed from above; (*c*), (*d*), and (*e*) are rear views with the back portion of the upper half of the valve broken away so as to show in section the reducing-valve piston and slide valve, the section of the slide valve being taken through port *b*.

Referring to the figure, *B* is the bracket by means of which the valve is attached to the car or engine; *2*, the valve body; *3*, the spring box; *4*, the reducing-valve piston; *5*, the piston packing-ring; *6*, the piston stem; *7*, the piston-stem nut; *8*, the slide valve; *9*, the slide-valve spring; *10*, the cap nut; *11*, the regulating spring; *12*, the regulating nut and guide for piston *4*; *13*, the check-nut; *14*, a union stud; *15–16*, a union connection; and *17*, the strainer. The pipe to the brake cylinder connects with the valve at *X*, while the exhaust port *Y* leads to the atmosphere. Since the brake cylinder is connected at *X*, it is evident that the space within bushing *d* is always charged to the same pressure as the brake cylinder; hence, the slide valve *8* and the upper side of piston *4* are at all times subjected to brake-cylinder pressure also. A port *c*, views (*a*) and (*b*), passes through the slide valve from one side to the other; also, a triangular port *b* leads from port *c* to the face of the slide valve. A small port *a* passes through the seat of the slide valve and connects with the exhaust *Y*. In views (*c*), (*d*), and (*e*), the covered part of port *a* is represented by dotted lines.

When the valve is used on a car, the regulating spring *11* is adjusted to just withstand a pressure of 60 pounds per square inch on the piston *4*; when used on an engine, it is adjusted to withstand 50 pounds pressure.

27. Operation of Valve.—Views (*a*) and (*c*) show the position of port *a*, with respect to port *b* of the slide valve, for all pressures under that for which the regulating spring is adjusted, which is usually 60 pounds. Port *a* is, of course, stationary; the slide valve *8*, however, fits in between the shoulders of the piston stem *6*, and is operated thereby; hence, port *b* moves up and down with the piston.

As long as the cylinder pressure remains less than 60 pounds per square inch, the reducing valve plays no part in an ordinary *service application* of the brake, the valve remaining in its normal position, with port *a* blanked, views (*a*) and (*c*). Suppose, though, that in making a service application, the brake-cylinder pressure should increase above 60 pounds; in that event, the pressure above the piston *4* would be sufficient to

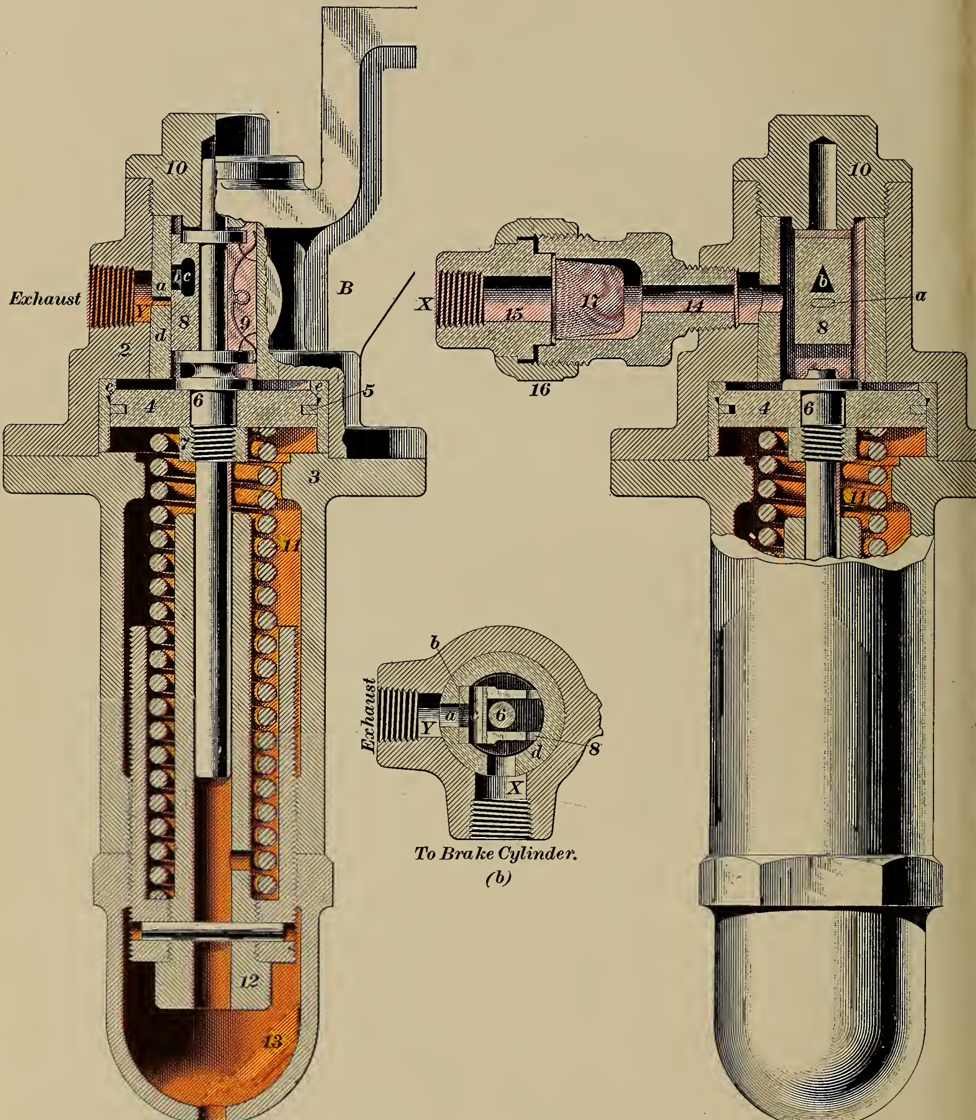

(a)
Release

(c)
Release

FIG

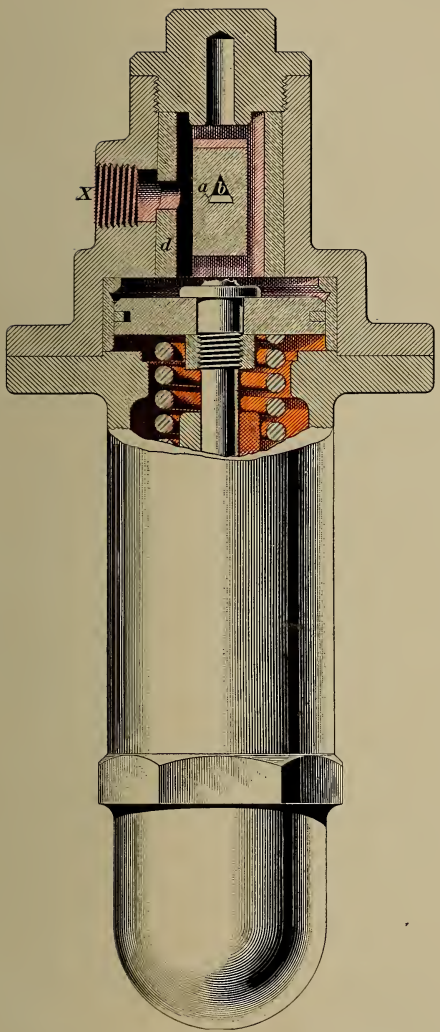

(d)
Service; Pressure Exceeding 60 Pounds

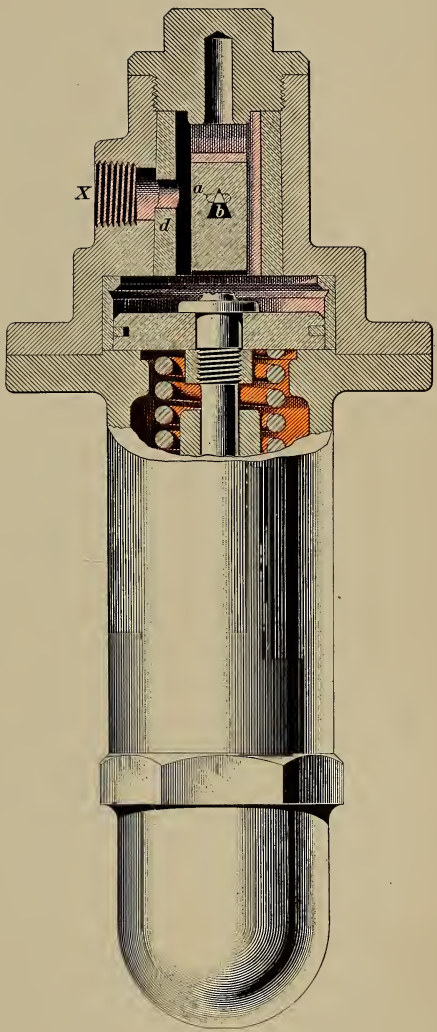

(e)
Emergency

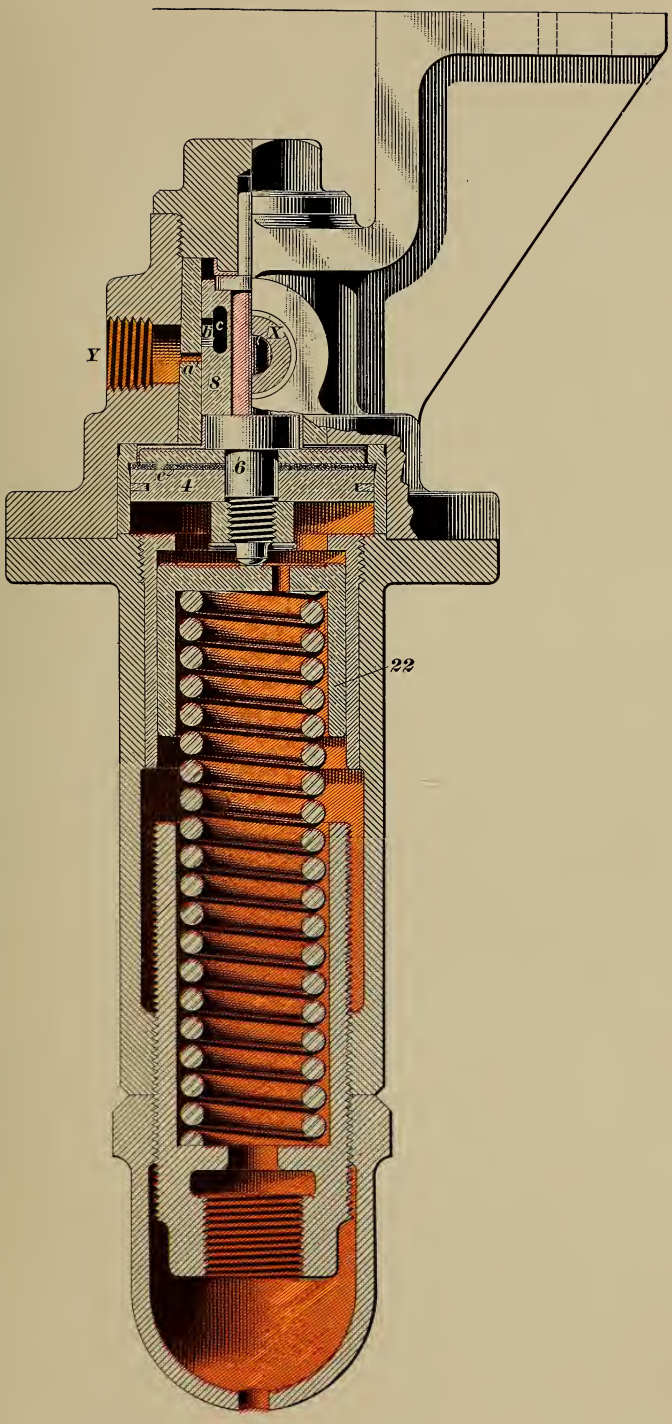

FIG. 10.

compress the regulating spring, and the piston and slide valve would be forced downwards until ports *a* and *b* assumed the position shown in view (*d*). In this position, brake-cylinder air is free to flow to the atmosphere through the ports *c*, *b*, and *a*, until the pressure is reduced to 60 pounds, when the regulating spring forces the piston and slide valve upwards into their normal position again. View (*d*) therefore shows the relative positions of ports *a* and *b* in a service application during the time the brake-cylinder pressure exceeds 60 pounds. The area of the opening through ports *a* and *b* in this position is such that air can discharge from the cylinder as fast as it enters through the service port in the slide valve of the triple.

The relative positions of ports *a* and *b* in an *emergency application* of the brake is shown in view (*e*). Here, air enters the brake cylinder from the train line and auxiliary reservoir in much greater volume than it could possibly escape through the ports *a* and *b* of the reducing valve; hence, piston *4* of the latter is forced downwards the full length of its stroke, and assumes the position shown in view (*e*). In this position, the passage through ports *a* and *b* is small, and air discharges quite slowly from the cylinder. As the pressure in the cylinder, and consequently above piston *4*, gradually decreases, due to the discharge through ports *a* and *b*, the regulating spring gradually raises the piston and slide valve, and, as the slide valve is raised, the opening through ports *a* and *b* gradually increases; consequently, the discharge from the cylinder increases accordingly until the brake-cylinder pressure is reduced to a safe amount (60 pounds), when the reducing valve assumes its normal position, covering the opening *a* so that no more air can escape from the brake cylinder.

IMPROVED AUTOMATIC REDUCING VALVE.

28. The latest form of the *high-speed* automatic reducing valve is shown in Fig. 10. This is an improvement on the valve just described, the changes, however, not being very great. In the old-style valve, Fig. 9, it will be noticed that the piston *4*, when in its normal position, is intended to make an air-tight joint with the bushing at *e*, the piston and bushing being

beveled for that purpose. In the new valve, the piston *4* includes a leather washer *e*, which forms an air-tight joint with the projection on the bushing. Also, the stem *6* has been shortened, and the guide *12* of the old valve is replaced in this valve by the spring abutment *22*. The operation of this valve is exactly the same as that of the old-style valve.

SAFETY VALVE.

29. In cases where a car equipped with an automatic brake must be used in connection with high-speed brakes, and there is not sufficient time in which to equip it with a regular automatic reducing valve, a small safety valve is screwed into the oil hole in the brake-cylinder head and used as a substitute during the trip. A sectional view of this **safety valve** is shown in Fig. 11. It consists simply of the valve body *2*, the valve *3*, regulating spring *4*, adjusting nut *5*, and lock cap *6*. The end *X* is screwed into the oil hole in the cylinder head, and, consequently, that portion of the valve marked *a* is always subjected to brake-cylinder pressure. Ports *y*, *y* connect the chamber above valve *3* with the atmosphere.

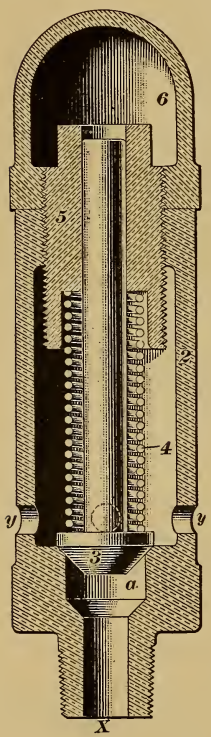

FIG. 11.

The spring *4* is adjusted by means of the nut *5* until it resists from 50 to 60 pounds pressure per square inch on the valve *3*. In adjusting either the safety valve or the automatic reducing valve, a gauge is attached to the brake cylinder, and the tension of the regulating spring is then adjusted until the gauge shows that the valve just retains the proper brake-cylinder pressure.

The operation of the safety valve is as follows: As is the case with the automatic reducing valve, the safety valve remains in its normal position as long as the brake-cylinder pressure

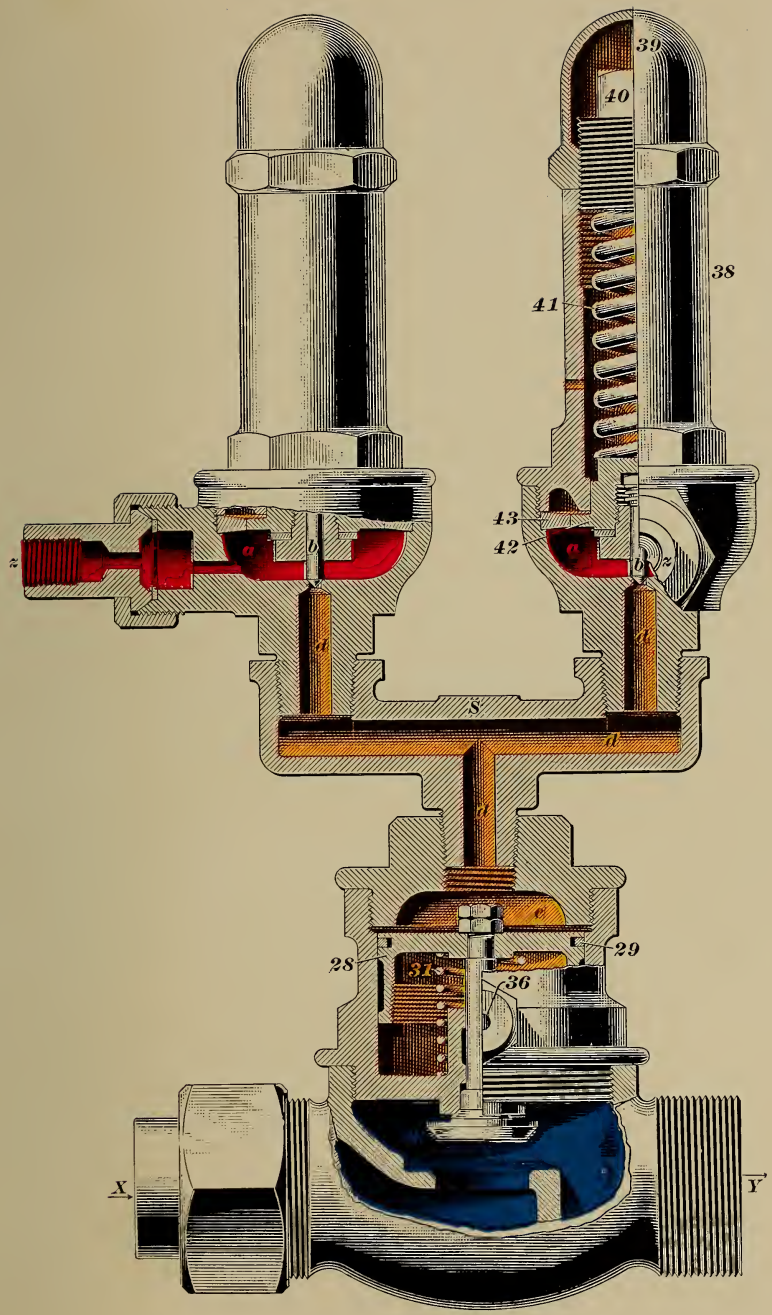

FIG. 12.

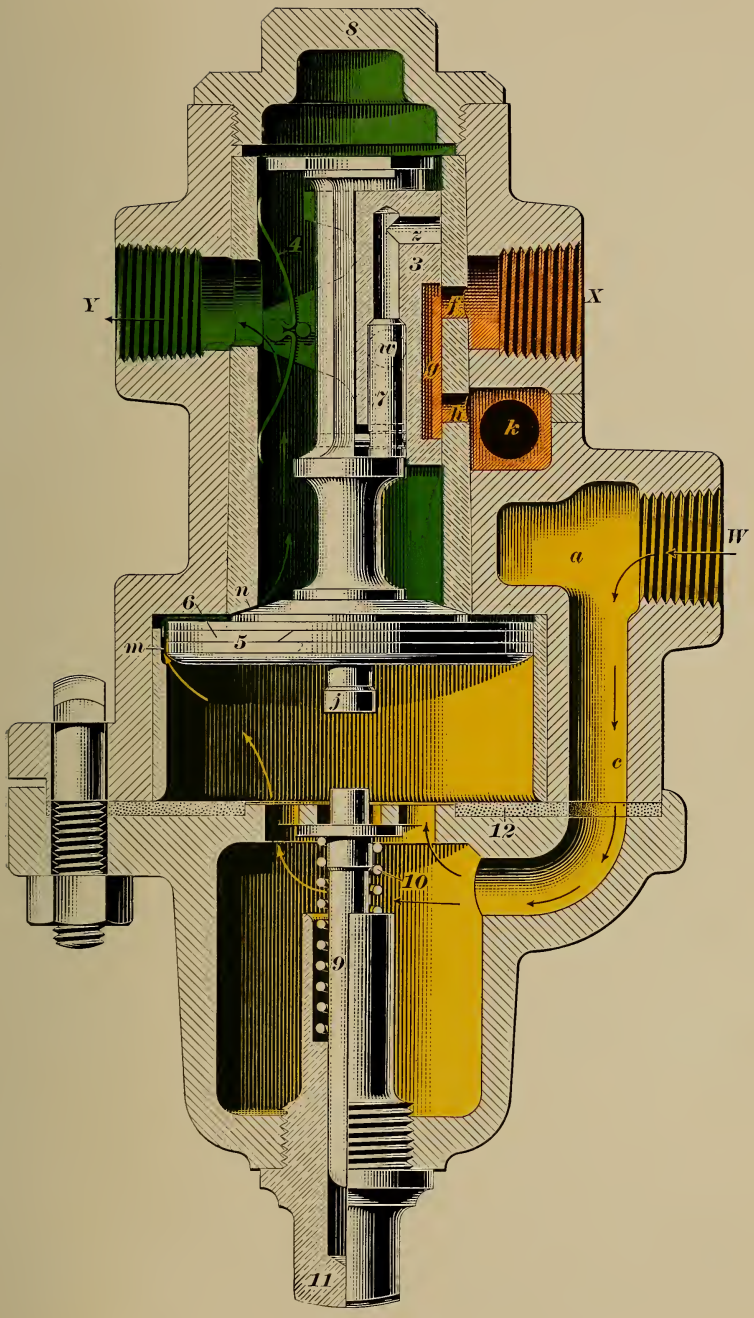

FIG. 13.

is less than that for which the valve is set to operate. If, however, the pressure in the brake cylinder exceeds that to which the spring *4* is adjusted, the valve *3* will be forced upwards, compressing the spring *4*, and the brake-cylinder pressure will exhaust to the atmosphere through the valve *3* and exhaust ports *y*, *y* until it is reduced to the pressure for which the valve is set; the spring *4* will then force valve *3* to its seat and the remaining pressure will be retained in the cylinder. As this is not a very reliable form of valve, it should only be employed temporarily in cases where the other form cannot be obtained.

DUPLEX PUMP-GOVERNOR.

30. A sectional view of the **duplex pump-governor** is shown in Fig. 12. By comparing Fig. 12 with Fig. 3 of Part 1, it will be seen that both the diaphragm bodies and the steam-valve body of the duplex governor are exactly the same as the corresponding parts of the ordinary governor (improved type). The only difference in the two governors is that the duplex governor is provided with the *Siamese* fitting *S*, and an extra diaphragm case. This governor is nothing more than a combination of two diaphragm bodies with one steam valve body, and it operates in exactly the same way as the ordinary governor, only one of the diaphragms acting at one time. The description of the improved governor, Art. **27**, Part 1, applies to this governor also, and therefore no further description is necessary. It will be observed that in breaking away the steam-valve case in the illustration of this governor, a sufficient portion has been retained to allow the drip-pipe connection *36* to be shown. Also, in breaking away the right-hand diaphragm case, part of the union fitting *z* has been left in. The parts of the valve are lettered and numbered the same as the corresponding parts of the valve shown in Fig. 3, Part 1.

HIGH-SPEED BRAKE TRIPLE VALVE.

31. Ordinary quick-action triple valves are used on the cars of a high-speed train. The plain triple used on the tender with the quick-action brake, however, is replaced in the

high-speed brake by a quick-action triple, while the plain triple used on the engine is replaced by another plain triple of special design. The engine triple, it will be remembered, operates both the driver and engine-truck brakes; hence, it is necessary to use a triple designed especially for that purpose. Such a one is illustrated in Fig. 13. By comparing Fig. 13 with Fig. 7 of Part 1, it will be seen that practically the only difference between this triple and the ordinary plain triple is in the size of the ports; the operation of the two valves is exactly the same. The corresponding parts of both triples are lettered and numbered similarly.

SPECIAL CYLINDER HEAD.

32. In order to use a quick-action triple on the tender-brake cylinder, it is necessary to replace the plain cylinder head

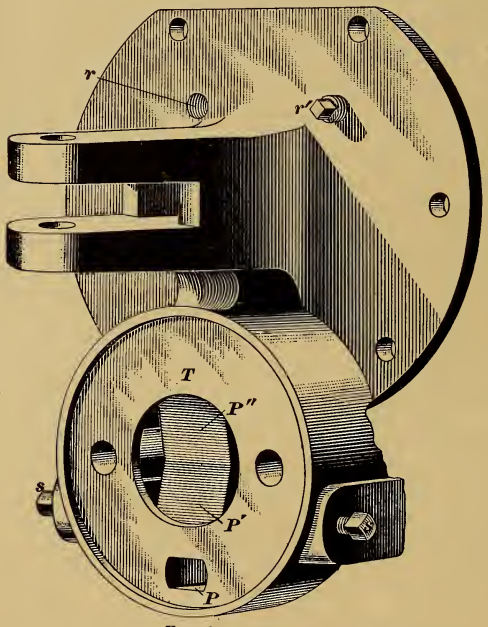

FIG. 11.

with one like that shown in Fig. 14. The triple is secured to the part *T* in such a way that the port *d* of the triple, Fig. 9, Part 1, connects with the passage *P* in the cylinder head,

while port Y connects (through the large central hole) with the space within T. The two tap bolts s, s serve as plugs for the two ports that lead to the space within T, and the pipe that leads from the auxiliary reservoir is screwed into either one or the other of the ports, as required. Air passes out from the triple and enters the cylinder head at P and passes on up through the interior of P' P'' and so on into the brake cylinder. The automatic reducing valve is screwed into the cylinder head at r; r' is the cylinder oil plug.

FEED-VALVE PIPE BRACKET.

33. In order to use the duplex feed valve along with the F-6 brake valve, it is necessary to remove the original feed-

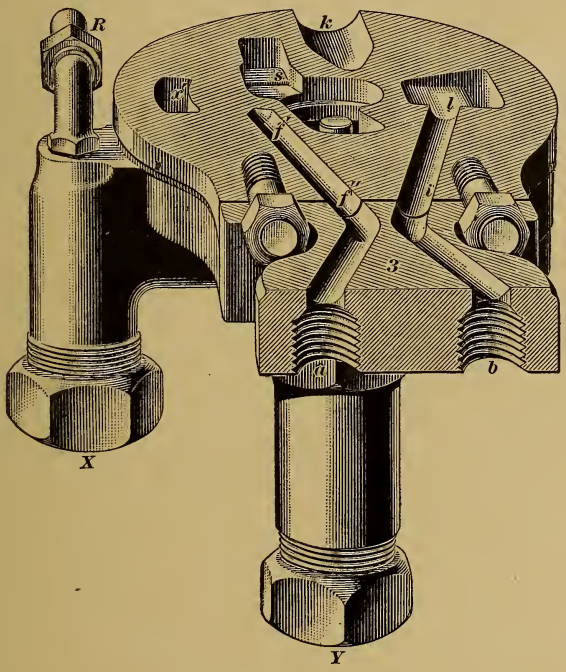

FIG. 15.

valve attachment and put a **feed-valve pipe bracket** in its place. A sectional view of this bracket, connected to the brake valve, is shown in Fig. 15. This figure represents

the same section of the F-6 brake valve as is given in view (*e*) of Fig. 16, Part 1.

The two pipes *a* and *b*, Fig. 8, that lead to the duplex feed-valve, screw into the pipe bracket *3* at *a* and *b*, Fig. 15. Thus, when the brake valve is in running position, air on its way to the train pipe flows through the passage *f' f''* and the pipe *a*, thence through whichever feed-valve happens to be cut in, and back through the pipe *b* and the passages *i* and *l* to the train pipe.

OPERATING THE BRAKE.

MAKING THE REDUCTIONS.

34. The brake on a high-speed train is operated in precisely the same manner as the ordinary quick-action brake. A number of reductions are made in a service stop, as with the latter, and the brake will be set in full or at about its maximum pressure when a reduction of from 20 to 22 pounds is made in the train-pipe pressure, if the piston travel is adjusted to 8 inches. In the high-speed system, the train pipe and auxiliaries are charged to about 110 pounds pressure per square inch, so that the brake may be applied three times in full, and still have the same pressure for the fourth application as would be had for the second application of the quick-action brake. That is, if train-pipe pressure is reduced from 110 to 90 pounds, sufficient air will pass from the auxiliary reservoir to the brake cylinder to raise its pressure to about 50 pounds. If, now, the brake is released without recharging at all, and the train-pipe pressure is reduced from 90 to 70 pounds, the brake will again be set with a pressure of 50 pounds. A second release, and a reduction from 70 to 50 pounds, will set the brake for the third time with a 50-pound pressure, and the train pipe and auxiliary will stand equal at 50 pounds. With the quick-action brake, a 20-pound reduction from 70 pounds train pipe will apply the brake with 50 pounds pressure, and the train pipe and auxiliary will stand equal at 50 pounds also. In fact, with either brake, a 20-pound reduction from any pressure will apply the brake with a pressure of 50 pounds per square inch.

With no leakage, a 22-pound reduction would set the brake with about 60 pounds pressure; hence, if a greater reduction is made, air will simply be wasted, since the reducing valve will not allow over 60 pounds pressure to remain in the brake cylinder.

With a 30-pound service reduction and an 8-inch piston travel, the auxiliary and brake cylinder would equalize at about 80 pounds per square inch were the reducing valve inoperative; while, in an emergency application, they would equalize at about 85 pounds per square inch, on account of some air passing from the train pipe into the brake cylinder. In an emergency application, however, the reducing valve gradually reduces the brake-cylinder pressure from 85 pounds to 60 pounds. The effect that this extra pressure, when the brake is first applied, has on the braking power of a train, was brought out by a system of experiments conducted by the Pennsylvania Railroad. These experiments proved conclusively that, at a speed of 60 miles per hour, an emergency application of the high-speed brake will stop a train in 450 feet less space than the ordinary quick-action brake.

BRAKE TESTS.

35. The tests referred to were made on October 1 and 2, 1894, near Ship Road, Pennsylvania, on a descending grade of 29 feet to the mile, the weather being fair and the rails dry. The train was made up of a locomotive and six Pennsylvania Railroad passenger cars, the total weight of the train being 564,000 pounds. The train was fitted throughout with the high-speed brake equipment before the test began, and no alterations were made during the test. The brakes were converted from ordinary quick action at 70 pounds to high speed at a much higher pressure, and back again, by simply cutting in the proper pump governor and feed-valve, so that the same apparatus was used in all the tests. A correct speed recorder was used for measuring and recording the speed of the train, and the brakes were applied at a certain spot by means of a trip arrangement (connected to the train pipe) coming in contact with an obstruction that was fastened to one of the

ties. This fixed the exact spot at which the brakes were applied, and enabled the length of the stop to be accurately measured.

The tests on the first day were made at a speed as near 45 miles per hour as possible, two tests being made with the ordinary quick-action automatic brake, and three with the high-speed brake cut in. The train-pipe pressure in the first two tests was 71 and 69 pounds, respectively, while in the last three tests it was 100, 104, and 100 pounds, respectively.

RESULTS OF BRAKE TESTS.

First Day.

Train-Pipe Pressure. Pounds.	Actual Speed in Miles per Hour.	Length of Stop in Feet.	Corresponding Length of Stop at 45 Miles per Hour.	Average Length of Stop at 45 Miles per Hour.
71	47¾	776	694	688
69	45½	697	683	
100	46¾	584	567	567
104	46¼	610	580	
100	47	601	555	

Second Day.

Train-Pipe Pressure. Pounds.	Actual Speed in Miles per Hour.	Length of Stop in Feet.	Corresponding Length of Stop at 60 Miles per Hour.	Average Length of Stop at 60 Miles per Hour.
68	60¾	1,697	1,658	1,622
71	61½	1,634	1,558	
71	58¾	1,584	1,649	
100	61¼	1,372	1,319	1,296
104	61½	1,361	1,299	
105	61½	1,330	1,269	
108	58¼	1,125	1,189	1,172
109	64¼	1,202	1,155	

On the second day, the tests were made at a speed as near 60 miles per hour as possible, three tests being made with a train-pipe pressure of about 70 pounds, and five with a pressure of about 100 pounds. The observations taken during the tests are given in the preceding table.

Explanation of Table.—Column 1 gives the train-pipe pressure used in each test; column 2 gives the actual speed of the train at the time the emergency application took place; column 3, the actual distance in feet the train traveled after the emergency application was made; column 4, the distance in feet the train would have traveled had it been running at the speed indicated (45 the first day, 60 the second), instead of at the actual speed as given in column 2; column 5 gives the averages of the distances marked with brackets in column 4.

From column 5 it will be seen that, at a speed of 45 miles per hour, the high-speed brakes will stop a train in about 120 feet less space than the ordinary quick-action brake, while, at 60 miles per hour, it will stop the train in about 450 or 326 feet less distance, depending on whether the train-line pressure used is greater or less than 105 pounds.

CONTROL OF HEAVY FREIGHT TRAINS ON GRADES.

36. The question of **adequate brake power** for trains on grades is an important one, especially when the operation of heavily loaded trains of large-capacity cars is considered. On medium grades, the quick-action brake has been found quite effective in both passenger and ordinary freight service, but, on very steep grades, it is extremely difficult and quite risky to attempt to control heavily loaded freight trains by means of the quick-action brake alone and without the aid of some special devices by means of which the braking power can be increased when necessary, to conform more nearly to the load.

The Westinghouse Air Brake Company has invented a very simple and satisfactory method of improving the brake control of heavily loaded trains, which, while allowing the train to be

worked ordinarily at the standard train-line pressure, provides for a higher pressure when circumstances require it. The method necessitates no change in the ordinary quick-action car apparatus, all the changes necessary being made in the engine equipment.

WESTINGHOUSE SPECIAL APPARATUS.

GENERAL ARRANGEMENT.

37. This **special brake apparatus** and its arrangement on the engine and tender is shown in Fig. 16. It will be seen to differ from the ordinary equipment in that (1) the pump governor is replaced by a *duplex governor;* (2) the feed-valve attachment by a *duplex feed-valve;* and (3) the engine triple valve by a *special high-speed triple.* The latter is necessary, since the engine-truck wheels, as well as the driving wheels, are fitted with brakes. Also, a safety valve, like that shown in Fig. 11, Art. **29,** is connected to the engine and tender-brake cylinders to prevent the cylinder pressure from increasing above 50 pounds per square inch, as it is not considered desirable to increase the pressure in either cylinder above that amount.

The duplex feed-valve is exactly the same as that used in connection with the high-speed brake, and is attached to the brake valve in the same manner. One feed-valve is adjusted for 70 pounds, while the other is usually adjusted for 90 pounds.

The duplex pump-governor, also, is the same as the one used with the high-speed brake, but it is piped differently, as will be seen by comparing Figs. 8 and 16. In the high-speed brake, both diaphragm cases of the governor are piped to the engineer's brake valve at *R,* while in Fig. 16, only the right-hand diaphragm case is piped to *R,* the other case being piped to a connection in the reversing cock, which leads to the chamber that communicates with the passage *f''* and chamber *u* of the feed-valve, Fig. 17. Pipes *c* and *a* therefore connect with the same chamber in the reversing cock. By this arrangement of the piping, it is possible: (1) to regulate the train-pipe pressure to 70 pounds and the main-reservoir pressure to 90 as

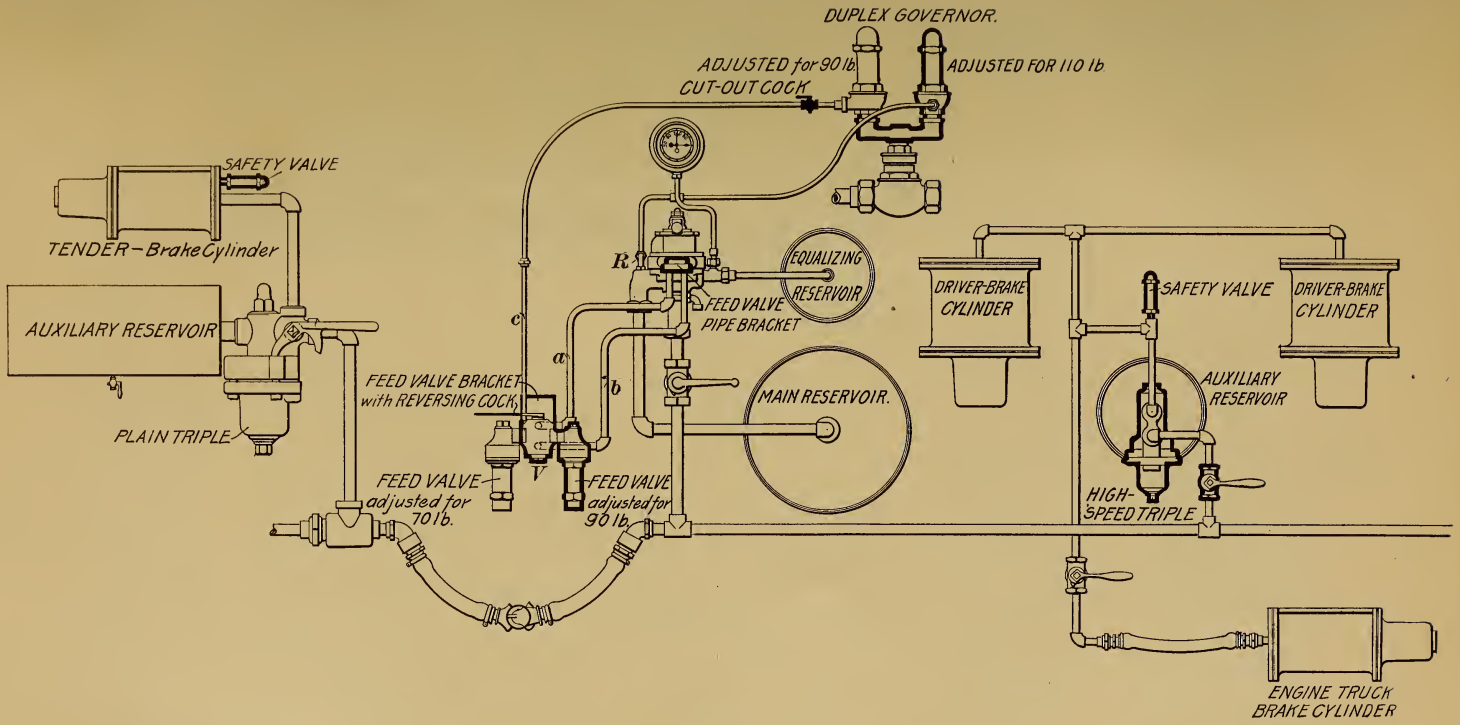
DUPLEX GOVERNOR.
ADJUSTED for 90 lb.
ADJUSTED FOR 110 lb.
CUT-OUT COCK
SAFETY VALVE
TENDER – Brake Cylinder
AUXILIARY RESERVOIR
PLAIN TRIPLE
FEED VALVE BRACKET with REVERSING COCK
FEED VALVE adjusted for 70 lb.
FEED VALVE adjusted for 90 lb.
R
c
a
b
EQUALIZING RESERVOIR
FEED VALVE PIPE BRACKET
MAIN RESERVOIR.
DRIVER-BRAKE CYLINDER
SAFETY VALVE
DRIVER-BRAKE CYLINDER
AUXILIARY RESERVOIR
HIGH-SPEED TRIPLE
ENGINE TRUCK BRAKE CYLINDER

FIG. 16.

long as the brake valve is left in running position, and when the brake valve is moved to lap position, to pump up main-reservoir pressure to 110 pounds; or (2) to continuously regulate the train-pipe pressure to 90 pounds and main-reservoir pressure to 110 pounds.

OPERATION OF APPARATUS.

38. Ordinary Running Conditions.—Ordinarily, the handle of the pump-governor cut-out cock is turned parallel with the pipe, so that the left-hand side of the governor operates the air pump. The reversing-cock handle is also turned to the left, as shown in Fig. 16, so that the train-line pressure is regulated by the left-hand feed-valve. Now, suppose the brake valve to be in running position and the pump working; air from the main reservoir can pass through the brake valve and pipe *a* to chamber *u* of the left-hand feed-valve, Fig. 17, and thence through pipe *c* to the pump governor. As soon as main-reservoir pressure is raised to 90 pounds, the governor will stop the pump. Main-reservoir pressure will then be maintained at 90 and train-pipe pressure at 70 pounds, as long as the brake valve is carried in running position.

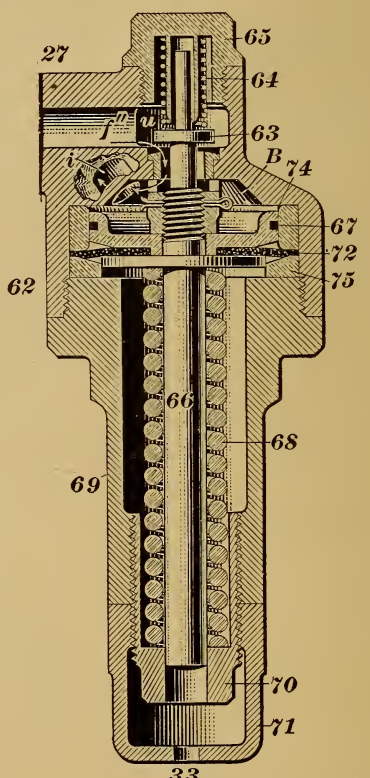

FIG. 17.

If a reduction in train-pipe pressure is made and the brake valve is then lapped, the supply valve *63* of the feed-valve will be forced from its seat by the regulating spring, and the air in

pipe *c* will consequently be reduced to train-pipe pressure. Now, since no air can pass from the main reservoir through the brake valve into pipe *c*, the pressure in the pipe must remain less than 90 pounds as long as the brake valve is lapped; hence, the low-pressure side of the pump governor is cut out of service just as effectually as though the cut-out cock in pipe *c* had been closed. The pump, therefore, will operate until 110 pounds pressure is accumulated in the main reservoir, when it will be stopped by the high-pressure side of the pump governor. With 110 pounds in the main reservoir with which to release the brakes, a quick release and prompt recharging of the auxiliaries is assured.

39. Descending Long Grades.—When the train is to descend a long grade, however, the cut-out cock in the pipe *c* is turned at right angles to the pipe, so as to cut the low-pressure side of the pump governor out of service, and the handle of the reversing cock is turned in the opposite direction to that shown in the figure, thus cutting into service the feed-valve that is adjusted to 90 pounds. Thus, when descending long grades, the main reservoir is charged to 110 and the train line to 90 pounds.

The brakes are operated in exactly the same manner as the quick-action brake, the only difference being that with the auxiliaries charged to 90 pounds, a full-service application of the brakes will result in a brake-cylinder pressure of about 65 pounds per square inch instead of 50 pounds.

When grades are exceptionally long and heavy, so that the driver brakes have to be held on hard for a considerable length of time, trouble is generally experienced with the driving-wheel tires heating, the friction between the brake shoe and the wheel generating heat that expands the tire. On such grades, therefore, the brake known as the *water brake* can be used to good advantage.

THE WATER BRAKE.

PRINCIPLES INVOLVED.

40. If the valve gear of a locomotive is reversed while the locomotive is running forwards with throttle closed, the engine cylinders will be converted into air compressors. As the piston moves either forwards or backwards, a vacuum is created in the cylinder behind it and hot gases from the smokebox are drawn in to fill the vacuum. The gases in the cylinder ahead of the piston are compressed, and offer a resistance that acts to stop the movement of the piston, and thus the speed of the engine is retarded.

With the valve gear in the reverse direction to which the engine is running, therefore, the engine cylinders act as brakes to retard the speed of the train. If the air drawn into the cylinders were cool and free from cinders, this method of braking would be simple and very efficient for use on engines on long down grades. As it is, however, cinders would be drawn into the cylinders and cause trouble; also, the gases in the smokebox are very hot, and, when drawn in, their temperature is still further increased by compression; hence, serious injury would result to the cylinders, valves, and valve seats, if this method of braking were used without some means of preventing the hot gases and cinders from entering the cylinders.

The water brake (sometimes spoken of as the LeChatelier brake) overcomes the objections to this method of braking by introducing wet steam at a low pressure into the cylinders, thereby excluding the hot gases. Unfortunately, the term "water brake" is a misnomer when applied to the LeChatelier method of braking, and is very liable to create the impression that water is used in the cylinders, whereas, in reality, the braking is done by means of low-pressure wet steam. It is scarcely necessary to remark that water in the cylinders has too often been the cause of considerable trouble for any one to voluntarily introduce it there.

CONSTRUCTION OF BRAKE.

41. The **water brake** was invented nearly fifty years ago by a prominent French engineer named LeChatelier, but it was not introduced in this country until years afterwards, being first used on the early mountain roads in the Rocky Mountains, a region where it has proved a very valuable auxiliary braking device. This brake is shown applied to an engine in Figs. 18 and 19, the former being a plan view of engine, and the latter a view taken at rear of cylinders. The brake apparatus consists of an ordinary globe valve *a* and sufficient piping *bbb* to connect the valve with the exhaust passages in the cylinder saddle at *c*, *c*. The globe valve is set in the boiler head, on a level with the crown sheet and at a point where it will be within easy reach of the engineer. The pipe used in connection with the globe valve is either a $\frac{3}{8}$-inch or a $\frac{1}{2}$-inch pipe, depending on the size of the engine cylinders. It divides into two branches at the cylinder saddle, each branch leading to, and opening into, one of the exhaust passages, as shown.

OPERATION OF PARTS.

42. As previously stated, the duty of the water brake is to supply low-pressure steam to the cylinders when the engine is running reversed, so that, by acting as compressors, the cylinders can be used as an auxiliary braking device without being injured by hot gases and cinders from the smokebox. It is well known that water will boil at 212° F. if in the open air; if subjected to a boiler pressure of, say, 180 pounds gauge, however, it will not boil until its temperature has been raised to about 380° F. If, now, some of the water in the boiler is allowed to escape into a pipe or vessel connected with the atmosphere, its temperature will be far greater than 212° F.; hence, it will boil and be converted into steam. The temperature of this steam, however, falling considerably during the conversion, the pressure exerted by it will be reduced accordingly.

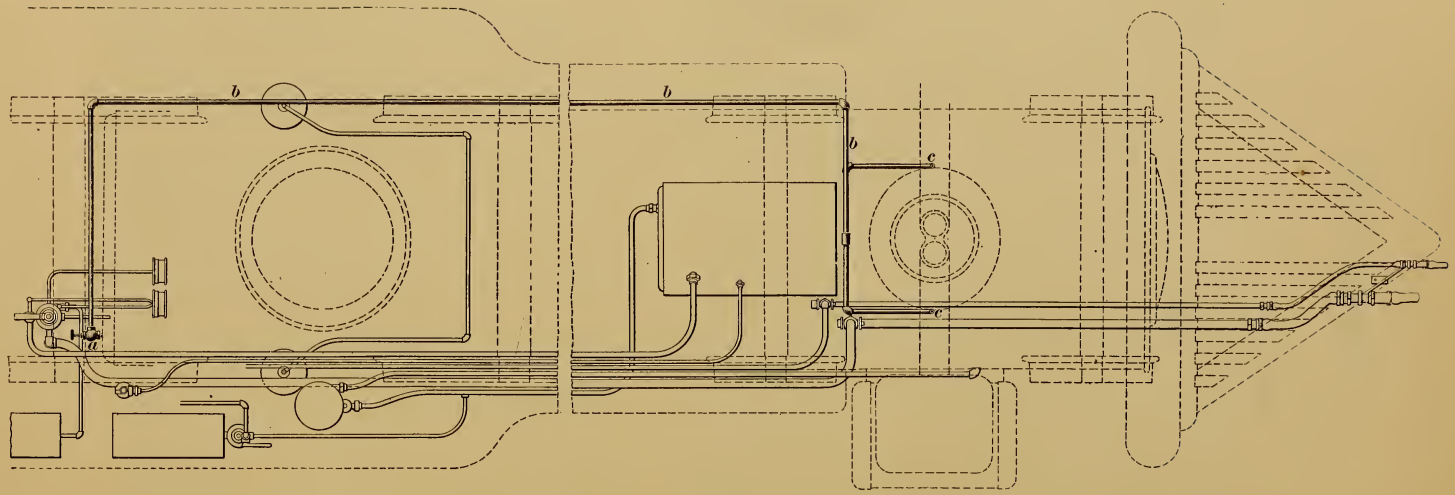

FIG. 18.

The valve and piping of the water brake simply provides the engineer with a convenient means of introducing water from the boiler into the exhaust passages in the cylinder saddle, where it is immediately converted into steam for use in the cylinders. By introducing the water into the exhaust passages,

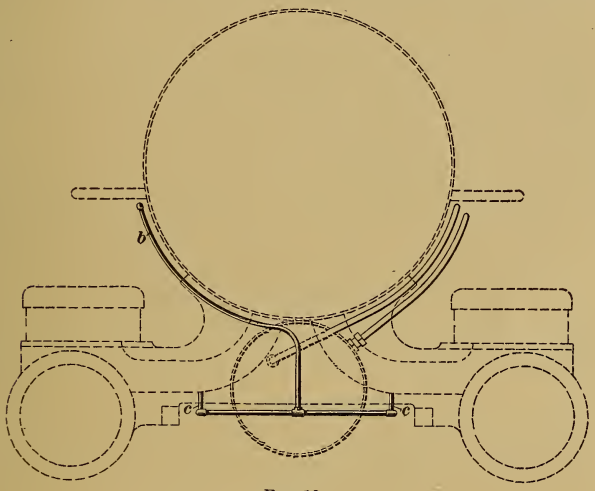

FIG. 19.

a vacuum is prevented from forming therein; hence, there is no tendency for the hot gases in the smokebox to be drawn into the cylinders.

It thus will be seen that the operation of this brake depends on the excess temperature of the water in the boiler over that required to boil water under atmospheric pressure; if the water in the boiler were at a temperature less than 212° F., it would not be converted into steam when discharged into the exhaust passages, and the result would probably be a broken cylinder head.

OPERATING THE BRAKE.

43. The water brake should always be operated in a **certain regular order,** which is as follows: First, be sure that all the cylinder cocks are open and that the throttle valve is shut; next, open the water valve (i. e., the globe valve *a*) about one-quarter turn; then immediately place the reverse

lever of the engine one or two notches back of the center and note the color of the steam issuing from the cylinder cocks. If dense white in color, the water valve is open sufficiently, but if the steam has a bluish color at the cylinder cock, which gradually changes to grayish white as its distance from the cock increases, the water valve should be opened a little wider until the steam has a dense white appearance from the moment it leaves the cylinder cocks. If the engine throws water from the stack, the valve is opened too wide and should be closed sufficiently to stop the trouble.

The amount of braking power exerted by the water brake depends on the position of the reverse lever. When it is in the first notch from the center, it exerts the least braking power, and the braking power is increased as the lever is moved towards the corner notch. The retardation of speed should therefore be regulated by placing the reverse lever in the notch required, and the water valve should not be changed after once being adjusted.

The water brake can be used when the engine is running either forward or backward, by simply placing the reverse lever so as to convert the cylinders into air compressors, observing the same rules of operation, regardless of the direction of running.

When it is desired to shut off the water brake, first close the water valve *a* and then *slowly* move the reverse lever towards the center, to avoid throwing water from the stack.

The water brake, it must be remembered, acts to stop the rotation of the drivers, so that if the air driver brake is used in conjunction with it, the braking force acting on the drivers will be too great, and they will be skidded. The water brake is simply an auxiliary braking device and should be used intelligently. It is most effective on a steady motion of from 3 to 12 miles per hour, is less effective at speeds greater than 12 miles per hour, and it should not be used at a greater speed than 18 miles per hour.

In double-heading on a grade, the engineer not operating the air brake assists in retarding the speed of the train by using the water brake to whatever extent advisable.

THE SWEENEY AIR COMPRESSOR.

PRINCIPLES OF WORKING.

44. The *Sweeney air compressor*, or the "Sweeney," as it is commonly called, is an air-compressing device that is used quite extensively on Western roads where the grades are heavy. It is not intended to replace the ordinary air pump, but rather to act as an auxiliary compressing device to help out the pump. In case the pump becomes disabled, however, it may be made to supply the entire amount of air necessary to bring the train safely down the grade.

CONSTRUCTION OF COMPRESSOR.

45. Two views of the **Sweeney**, applied to an engine, are given in Fig. 20 (*a*) and (*b*). It will be seen that a $1\frac{1}{4}$-inch pipe is tapped into the top of the steam chest at *a*, and thence leads to the main reservoir. A stop-cock *c* is placed in the pipe so as to control the passage through it. This stop-cock can be opened and closed from the engine cab by means of the rod *e*, which is connected to the lever *b* of the stop-cock. Pushing the handle forwards opens the cock, while pulling it backwards closes it. Also, a check-valve *v* is placed in the pipe, close to the main reservoir. The object of this valve is to prevent pressure from flowing from the main reservoir back through the pipe to the steam chest. A safety valve *d* is also provided, which prevents the main reservoir from being overcharged, since it will open and allow the air to discharge from the cylinders to the atmosphere when main-reservoir pressure is raised to the pressure for which the safety valve is adjusted.

OPERATING THE COMPRESSOR.

46. To **operate** the Sweeney, the throttle must, of course, be closed, and the engine running. The cylinder cocks should first be left open while the drivers make two or three revolutions, so as to get rid of any water there may be in the

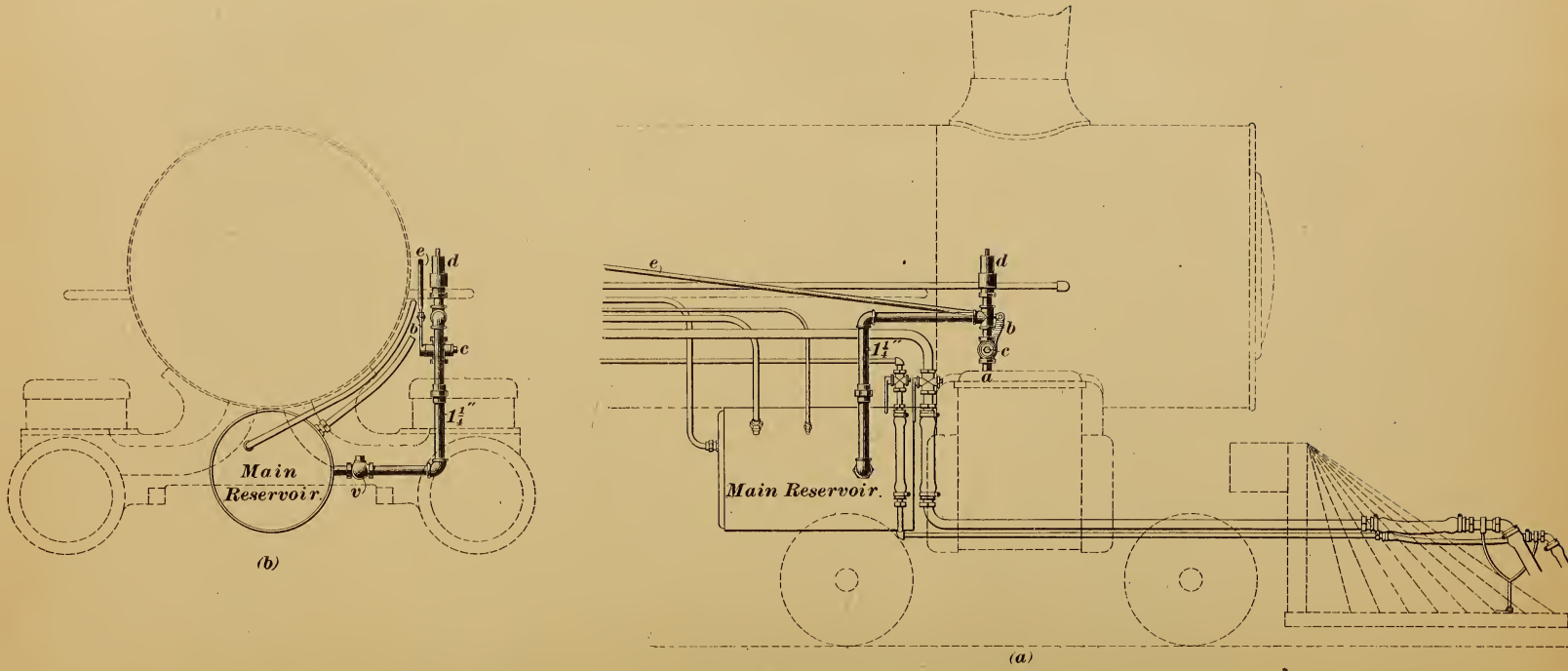

FIG. 20.

cylinders. The engineer's brake valve should then be placed on lap, the stop-cock *c* opened, and the engine reverse lever placed several inches back of the center notch, assuming the engine to be running forwards. By reversing the valve gear while the engine is running, the cylinders are converted into air compressors, and air is compressed and forced into the steam chest and thence through the $1\frac{1}{4}$-inch pipe to the main reservoir. As the capacity of the steam cylinders is large compared with that of the air-pump cylinder, the main reservoir is charged in a very short time by this method. The reverse lever must be left back of the center notch at least 15 seconds after the gauge indicates standard pressure.

To throw the Sweeney out of service, place the reverse lever in the forward motion and close the stop-cock *c*; care must always be taken to see that the stop-cock is closed before steam is used, since, if it is left open, the air-brake system will be charged with steam when the engine throttle is opened, and trouble will surely result.

A SERIES OF QUESTIONS

Relating to the Subjects
Treated of in This Volume.

It will be noticed that the questions contained in the following pages are divided into sections corresponding to the sections of the text of the preceding pages, so that each section has a headline that is the same as the headline of the section to which the questions refer. No attempt should be made to answer any of the questions until the corresponding part of the text has been carefully studied.

THE AIR BRAKE.

(PART 1.)

NOTE.—In describing the construction or working of the various brake details, when answering the following questions, we should prefer that the student refer to the various parts by their proper names instead of using the reference letters and numerals given in the text; all his replies, moreover, should be in his own language, and not be merely copies from the book. In dealing with some of the questions, he may profitably experiment with the brake apparatus on his engine, as this will help to fix its various operations in his mind. Still, all the questions can be satisfactorily reasoned out and answered without such aid, if the text has been carefully studied.

(1) Explain how the *air end* of the 8-inch air pump works.

(2) (*a*) How great a train-pipe reduction (from 70 pounds) is necessary to get a full-service application of the brakes? (*b*) Would a still greater reduction set the brakes any harder, and would it be advisable to do so? Give reasons for your answer. (*c*) When a brake is set with a full-service application, how much pressure is there in the auxiliary reservoir, and how much in the brake cylinder?

(3) (*a*) How would you operate the brake valve to make an emergency application of the brakes? (*b*) Explain the working of the valve in an emergency application.

(4) Speaking generally, (*a*) what will cause the brakes to *set?* (*b*) what will cause the brakes to *release?*

(5) Explain how the *steam end* of the 8-inch air pump works.

(6) Can an emergency application of the brakes be obtained by making a *gradual* heavy reduction of train-pipe pressure? Explain.

(7) In what position would you carry the brake valve between the reductions in a service application of the brakes, and why?

(8) (*a*) What is meant by *excess pressure*, where is it carried, and why is it necessary? (*b*) How is excess pressure maintained when an F-6 brake valve is used?

(9) Why were the ports *c* and *f* provided in the improved pump governor?

(10) (*a*) Does a plain triple set the brake harder in an emergency than in a service application? Explain in full. (*b*) Does a quick-action triple, and if so, why?

(11) (*a*) How would you make a service reduction with either style of brake valve? (*b*) In making such a reduction, do you draw air direct from the train pipe, and if not, from what place is it drawn? (*c*) Explain how the train-pipe exhaust valve *E* works.

(12) (*a*) Why is the small equalizing reservoir provided, and how is it connected to chamber *D* of the brake valve? (*b*) If the pipe to this reservoir became completely stopped up, how would it affect the working of the brake?

(13) By what pressure is the pump governor operated when used in connection with (*a*) the D-8 brake valve, and (*b*) the F-6 brake valve? (*c*) Explain how the improved pump-governor works.

(14) Where does all the air come from that enters the brake cylinder during an emergency application, with (*a*) the plain triple, and (*b*) the quick-action triple?

(15) (*a*) In what position would you place the brake valve to release the brakes? (*b*) Trace the flow of air through the brake valve (D-8 or F-6) in this position.

(16) What is the *engineer's warning port*, and why is the F-6 brake valve provided with one?

(17) What pressure does (*a*) the red hand, and (*b*) the black hand, of the duplex air gauge indicate?

(18) How great a train-pipe reduction is necessary to get a full emergency application of the brakes (*a*) with plain triples, and (*b*) with quick-action triples? Explain fully.

(19) (*a*) State the duty of the ports *e*, *f*, *g*, *h*, *k*, and *l*, and also of cavity *b*, in a rotary-valve seat. (*b*) What is the duty of port *j* in the rotary valve?

(20) If, after releasing the brakes with a D-8 brake valve, the valve is moved to *lap position* while train-pipe pressure is only 65 pounds, (*a*) how will the two gauge hands move as the pump raises the pressure in the main reservoir? (*b*) When the pump stops, what pressure will there be in the main reservoir, train pipe, and chamber *D*? Also answer questions (*a*) and (*b*), assuming that an F-6 brake valve is used instead of a D-8 valve. Explain your answers fully.

(21) (*a*) Where is the main reservoir usually located, and how much pressure does it usually carry? (*b*) Explain why a larger main reservoir is necessary in freight than in passenger service. (*c*) Why should water not be allowed to accumulate in the main reservoir, and how often should the reservoir be drained?

(22) Explain how the plain triple works, and trace the flow of air through it, (*a*) in releasing the brakes; (*b*) in making two reductions during a service application; and (*c*) in an emergency application.

(23) What is the duty of the retaining valve, and how does it work?

(24) Assume that, in releasing the brakes with a D-8 brake valve, main-reservoir pressure equalizes with the train pipe at 65 pounds pressure; after which, the brake valve is moved to *running position*. (*a*) Which gauge hand will move first when the governor starts the pump, and how far will it go before the

other hand moves? Give reasons. (*b*) What pressure will there be in the main reservoir, train pipe, and chamber *D*, when the governor stops the pump? Also answer questions (*a*) and (*b*), assuming that an F-6 brake valve is used instead of a D-8. Explain your answers fully.

(25) Name the essential parts of the automatic brake, and state what each part is for.

(26) (*a*) What are the three duties of a triple valve? (*b*) What is the duty of the graduating valve in a triple, and how does it work? (*c*) What is the duty of the triple piston, and of the graduating stem and spring?

(27) (*a*) Why are brake cylinders provided with a leakage groove similar to that marked *a* in Fig. 10? (*b*) What is the duty of the bleed cock *17*, and how is it used? (*c*) What returns the brake-cylinder piston to release position when the brake is released?

(28) If a D-8 brake valve is allowed to remain in release position after releasing the brakes, (*a*) how much pressure will there be in the train pipe, in chamber *D*, and in the main reservoir, when the governor stops the pump? (*b*) How much would there be in the above places if the D-8 brake valve were replaced by an F-6 valve? Explain your answers fully.

(29) Why was the plain automatic brake replaced by the quick-action automatic brake?

(30) Explain clearly how the *air end* of the 9½-inch air pump works.

(31) Explain how the quick-action triple works, and trace the flow of air through it (*a*) in a service application, and (*b*) in an emergency application.

(32) (*a*) What is the duty of the feed-valve attachment of the F-6 brake valve? (*b*) Explain how it works, and how it can be adjusted to regulate as desired.

(33) When the plain automatic brake was adopted, what addition to the straight-air car equipment was necessary in order to convert it into an automatic equipment?

(34) Explain briefly how the *steam end* of the 9½-inch air pump works.

(35) (*a*) What constitutes the *emergency part* of the quick-action triple? (*b*) What is the duty of the rubber-seated emergency valve? (*c*) What is the duty of the check-valve *15*, and what causes it to unseat and seat again during an emergency application?

(36) How does the excess-pressure valve in the D-8 brake valve maintain a difference of 20 pounds between the train pipe and the main reservoir when the brake valve is in running position?

(37) What defects in the straight-air brake system caused it to be abandoned?

(38) In the 9½-inch air pump, what is the duty of slide valve *83*, main valve *76*, and reversing valve *72*?

(39) Can the brake on any car be cut out without interfering with the rest of the brakes on the train, and if so, how?

(40) When and why should the brake valve be carried in *running* position?

THE AIR BRAKE.

(PART 2.)

(1) How would you test for worn steam-piston packing rings?

(2) If an 8-inch pump stops, where would you look for the cause?

(3) What will be the effect of a badly worn packing ring in a plain triple?

(4) How would you test for a leaky rotary valve?

(5) What effect will a leak at the pin valve of a pump governor have?

(6) How would you test for a leaky receiving valve in an 8-inch air pump?

(7) If an air pump stops, how would you proceed to start it?

(8) Name the defects that will cause a blow at the exhaust port of a plain triple.

(9) Explain fully how to *remove* and *clean* an excess-pressure valve.

(10) What will be the effect if the relief port *c* in an improved governor is stopped up?

(11) How would you determine whether a receiving valve in a $9\frac{1}{2}$-inch pump is leaking?

(12) How large is the feed groove in a triple valve made?

(13) Explain in detail how a triple valve should be cleaned.

(14) If for any reason an excessive pressure is pumped up in the main reservoir, what precautions should be observed when releasing brakes?

(15) What will be the effect if the governor drip pipe becomes frozen or stopped up?

(16) If an auxiliary charges too slowly, to what would you attribute the cause?

(17) What will be the effect of a leaky discharge valve, and how can you tell whether one is leaking or not?

(18) State the causes of trouble in the freight equipment, and give the effects of each cause.

(19) In what two positions of a D-8 brake valve will the black gauge hand indicate main-reservoir pressure?

(20) What effect will a "buckled" diaphragm in an old-style governor have?

(21) If the air valves in an air pump have too much lift, what will be the result?

(22) What effect will leaks in the train pipe have on the triple valves?

(23) Explain how the freight equipment should be cleaned and oiled.

(24) Why, when the train pipe is short, does a blow sometimes occur at the train-pipe exhaust port on releasing the brakes?

(25) If the governor becomes inoperative and cannot be repaired during the run, how would you cut it out of service so that the pump can be operated by hand?

(26) How can you tell whether a receiving air-valve is stuck shut?

(27) What will be the effect if an auxiliary reservoir or its connections leak?

(28) How would you test a retaining valve?

(29) How would you test whether the pump governor is properly adjusted?

(30) If the governor has to be cut out of service, can the pump be governed, and if so, how?

(31) How can you tell whether a discharge air-valve is stuck shut?

(32) What will be the effect if the strainer in a triple valve is partly stopped up?

(33) State the advantages to be gained by the use of retainers.

(34) How can you test whether the feed-valve attachment needs regulating?

(35) What precautions should be observed in packing an air pump?

(36) Where would you look for a leak from an auxiliary reservoir?

(37) State the causes of pounding in an 8-inch pump.

(38) Give the causes of trouble in the retaining valve; also their effects.

(39) If no excess pressure can be maintained with an F-6 brake valve, where would you look for the cause?

(40) What kind of oil, and how much of it, should be used in the air cylinder of a pump?

(41) State the causes of pounding in a 9½-inch pump.

(42) How will a leaky graduating valve affect the operation of the brake?

(43) If a retainer is broken from its pipe, will the brake apply and release properly? Explain clearly.

(44) How can you tell whether the gasket *32* of an F-6 brake valve is leaking?

(45) How should the oil be introduced into the air cylinder of a pump?

(46) What should be the lift of the air valves in both the 8-inch and the 9½-inch pumps, and what effect will too little lift have?

(47) Does a defective graduating spring in a triple valve have the same effect when the train pipe is long as when it is short? Explain fully.

(48) If a retainer is broken from its pipe, should the pipe be plugged? Give reasons.

(49) Explain clearly how you would remove and clean the supply valve *63* of the feed-valve attachment.

(50) Should oil ever be introduced into an air pump through the air inlets? Give reasons.

(51) State the causes that will produce a blow in a 9½-inch pump; also, whether the blow will be continuous, and if not, whether it will occur on the up or on the down stroke.

(52) Explain how a "sticky" triple will cause trouble.

(53) How can you test—by means of the brake valve—whether the air gauge is correct?

(54) What would you do in the event of the feed-valve case gasket *27* allowing air to leak between the ports f' f'' and i?

(55) Should kerosene or coal oil ever be used in a hot pump? Give reasons.

(56) State the causes of a blow in the 8-inch pump. Explain fully.

(57) If the pin that connects the graduating valve 7 to the triple-piston stem is broken, what effect will it have?

(58) If the excess-pressure valve spring were too weak, how would the fact be indicated, and what would be the remedy?

(59) If a continuous blow occurs at the train-pipe exhaust, to what would you attribute it, and how would you proceed to stop it?

(60) If the air passages in an air pump becomes gummed up, how may they be cleaned out?

(61) If the 9½-inch pump should stop, where would you look for the cause?

(62) Does the handle of the brake valve have to be left in service position any longer when the train pipe is long than when it is short, to make a 5-pound train-pipe reduction?

(63) What would be the effect and remedy if the excess-pressure spring were too stiff?

(64) What would be the effect of a leak in the equalizing reservoir or its connections?

(65) Explain clearly how an air pump should be started, and at what speed it should be run.

(66) If a 9½-inch pump stops, how can you test whether the pump governor is responsible for the trouble?

(67) If a blow occurs at the exhaust port of a quick-action triple, where would you look for the cause?

(68) What would you do if the excess-pressure spring should break?

(69) In case of a bad leak in the equalizing reservoir or its connections, such that the brake system is rendered inoperative, what would you do?

(70) Give your ideas in regard to the lubrication of the air-pump steam cylinder.

(71) How can you determine whether the pump governor is responsible for the 8-inch air pump stopping?

(72) What difference is there in the blow that occurs at the triple exhaust, due to a leaky slide valve or to a leaky emergency valve?

(73) If a D-8 brake valve fails to maintain excess pressure, to what might it be due?

(74) If the brakes cannot be applied from service position, what precautions should be observed in making service stops from emergency position?

(75) Give the causes of an air pump overheating.

THE AIR BRAKE.

(PART 3.)

(1) How should a terminal test of a train be made? Explain fully.

(2) (*a*) If a blow occurs at the exhaust port of a triple or of a pressure retainer, to what may it be due? (*b*) In the event of such a blow, would you plug the exhaust port? Give reasons.

(3) How should a *service* stop be made with a passenger train?

(4) How would you make a water-tank or coal-chute stop with (*a*) a part-air freight train? (*b*) an all-air freight train?

(5) If you were to pick up several cars, which probably were uncharged, how would you proceed so as to save time?

(6) Explain when and how you would use sand on the rails.

(7) Within what limits should the piston travel be maintained on (*a*) a passenger car? (*b*) a freight car? (*c*) the tender? and (*d*) the driver brakes?

(8) Where would you look for the cause if your driver brake (*a*) failed to apply? (*b*) failed to release? (*c*) released immediately after it had set?

(9) Where are leaks liable to occur in (*a*) the train pipe and branch pipes? (*b*) the hose and couplings? (*c*) the auxiliary reservoir? and (*d*) the brake cylinder?

(10) In making a service stop, how many reductions should be made, and how great should each reduction be?

(11) If it were necessary to use the hand-brakes in conjunction with the air brakes, would you use those at the rear end of the train? Give your reasons.

(12) How would you proceed to set out a car at a way station?

(13) How would you locate a triple that set its brake "quick action" when a service reduction was made?

(14) Suppose that in the same train there are two cars having brake-piston travels of 4 and 10 inches, respectively. (*a*) At what pressures would they equalize? (*b*) Which would equalize first? (*c*) Which would release first?

(15) How should a part-air train be made up?

(16) How can you determine the condition of the triple piston packing-ring without taking the triple down? Explain fully.

(17) (*a*) How can the condition of the brakes be ascertained by means of the temperature of the car wheels? (*b*) How can defects be located by means of the temperature test?

(18) Explain fully how a *service stop* should be made with a part-air train.

(19) How would you handle a train on a long down grade?

(20) Suppose the brake-piston travel on three cars to be 4, 8, and 10 inches, respectively; what will be the pressure in the three brake cylinders if a train-line reduction of 16 pounds is made?

(21) What is the greatest allowable pressure on the brake shoes of (*a*) passenger cars? (*b*) freight cars? (*c*) tenders? (*d*) driving wheels?

(22) How would you stop a train in an emergency? Explain fully.

(23) Does the length of the train pipe have any effect on the way the train "handles," and if so, what?

(24) What should the engineer do in case the brakes apply suddenly, from no apparent cause?

(25) If, in making a terminal test, a brake was found that would not release, (*a*) where would you look for the cause? and (*b*) what would you do?

(26) Why is it bad practice to make more than two applications in stopping a train?

(27) If the driver brakes are applied, should the engine be reversed to help stop the train in an emergency? Give reasons for your answer.

(28) What course would you pursue in the event of (*a*) an all-air train breaking in two? (*b*) a part-air train breaking in two?

(29) How and when should a running test of the brakes be made?

(30) When double-heading, what are the duties (*a*) of the leading engineer? (*b*) of the following engineer?

(31) (*a*) What would you do in case a hose burst? (*b*) How can the engineer help to locate a burst hose?

(32) How can the braking power of a cam driver-brake be determined?

(33) If a stop is to be made with two applications of the brake, what would be the effect of overcharging the train pipe when releasing after the first application?

(34) Explain how you would cut a car out.

(35) How should a stop on a grade be made with a passenger train?

(36) Explain how you would cut a car brake out of service.

(37) If, in making a terminal test, a brake is found that will not stay on, (*a*) where would you look for the cause? and (*b*) what would you do?

(38) Explain how "slack" affects the smooth handling of a train.

(39) When and how should the conductor's valve be used?

(40) How would you "bleed off" a brake?

(41) Explain fully how to adjust the brakes (*a*) on a car; (*b*) on a cam driver-brake; (*c*) on an American equalized driver brake.

(42) What causes wheels to slide?

(43) What precautions should be observed in stopping and starting a long all-air freight train?

(44) If, in making a terminal test, a brake is found that will not apply, what would you do?

(45) If the brake-piston travel is not uniform throughout the train, being, say, 4 inches on some cars and 10 inches on others, will the smooth handling of the train be thereby interfered with? Explain.

(46) How would you measure the piston travel on a freight car?

THE AIR BRAKE.

(PART 4.)

---

(1) Explain the operation of the signal valve.

(2) (*a*) How much pressure must be carried with the new style of signal reducing valve? (*b*) How much with the old style?

(3) (*a*) How much pressure is carried in the train pipe of the high-speed brake? (*b*) What amount of excess pressure is there in the main reservoir?

(4) A train now fitted with the ordinary quick-action brake is to be equipped with the Westinghouse special apparatus for controlling heavy trains on grades; what changes must be made in the existing equipment?

(5) Why is the Sweeney air compressor applied to engines working in mountainous districts?

(6) On what class of trains is the high-speed brake chiefly used, and why is it necessary on these trains more than on others?

(7) If, on pulling the signal cord on a car, you obtained a very long blast from the whistle, where would you suspect the trouble to lie?

(8) (*a*) In using the Sweeney compressor, how long should the reverse lever be kept back of the center notch? (*b*) Should

the engineer ever work steam when using this device? (*c*) Do you think it is advisable for the engineer to test this apparatus after leaving a terminal?

(9) If the signal whistle gives only a weak blast when the cord is pulled, to what would you attribute the trouble?

(10) Explain the operation of the high-speed automatic reducing valve.

(11) (*a*) Explain the construction of the Sweeney compressor. (*b*) How is it operated?

(12) With the high-speed brake, about 85 pounds is obtained in the brake cylinder on the brake first setting; as the speed slows down, this pressure gradually drops to 60 pounds. How is this accomplished?

(13) (*a*) How and when should the signal apparatus on the engine be tested? (*b*) Is it reliable to make a test with the stop-cock on the rear of the tender or front of the engine? Explain.

(14) With the high-speed brake, 110 pounds pressure is usually carried in the train pipe. If we made an emergency application, at what pressure would the auxiliary and the brake cylinder equalize?

(15) What is the duty of the safety valve that is connected to the engine and tender brake when the Westinghouse special apparatus is used?

(16) Explain the operation of the improved air-signal reducing valve.

(17) If the whistle blows every time the brakes are released, where would you look for the cause?

(18) (*a*) If an engine equipped with the high-speed brake were to be coupled to a train likewise so equipped, in what

position would you place the handle of the feed-valve reversing cock and of the pump-governor cut-out cock, and why would you so place them? (*b*) If the engine were to be coupled to a train having ordinary quick-action brakes, in what position would you place the handles? Give reasons for you answers.

(19) Explain the principle of the water brake.

(20) (*a*) How can the air signal be operated most successfully from the cars? Explain. (*b*) What time should elapse between two successive discharges from the car discharge valve? Explain.

(21) When, only, should the small safety valve shown at *A* in Fig. 8, Part 4, be used in high-speed service?

(22) (*a*) Explain how to apply the water brake. (*b*) At what speeds should it be used? (*c*) Should the driver brakes and the water brake be used together, and if not, why? (*d*) Explain how to proceed when it is desired to "shut off" the water brake.

(23) (*a*) What defect may cause the signal whistle to give two blasts when the cord is pulled? (*b*) How can this defect be remedied?

(24) What changes are necessary in the apparatus of the ordinary quick-action brake to convert it into the high-speed brake?

(25) Explain how the Westinghouse special apparatus for the control of heavily loaded trains is used (*a*) on grades, (*b*) on a level section.

(26) In applying the water brake, what would probably happen if the engineer opened the water valve too wide?

(27) If the signal pipe fails to charge, where would you look for the cause?

(28) If a signal can be transmitted from the forward cars of a long train, but not from the rear cars, where would you look for the cause of the trouble?

(29) Explain how you would operate the brakes of a train equipped with the high-speed brake.

(30) If the signal whistle does not blow when the signal cord is pulled, where would you look for the cause?

(31) Explain how to transmit signals by means of the air-signaling system.

(32) What are the advantages of the high-speed brake over the ordinary quick-action brake?

INDEX.

A.

	Sec.	Page.
Adjusting brakes	3	40
Air brake, Automatic	1	3
" " General equipment of	1	1
" " Historical account of	1	1
" " hose	1	43
" " The straight	1	1
" cylinder of 8-inch pump	1	19
" " " 9½-inch pump	1	26
" " Oiling	2	5
" gauge	1	5
" " Duplex	1	10
" passages stopped up	2	11
" piston nuts loose	2	19
" pump	1	4
" " Testing	3	5
" " The 8-inch	1	16
" " The 9½-inch	1	21
" signaling system	4	1
" " " Defects in	4	11
" " " Testing	4	15
" valve stuck shut	2	11
" valves, Lift of	2	7
All-air train	3	4
" " freight train	3	24
Apparatus for working heavy freight trains on grades	4	32
Application, Emergency	1	33
Applications, Number of	3	21
Applying the brake	1	31
Automatic air brake, General Arrangement of	1	4
Auxiliary reservoir	1	7
" "	1	41
" " Charging	1	31
" " " too slowly	2	20
" " leaks, Effect of	2	22

B.

	Sec.	Page.
Bleed cock	1	41
Bleeding brakes off	3	29
Blow at exhaust (plain triple)	2	29
" " " (quick-action triple)	2	23
Brake, Applying	1	31
" Cutting out	3	14
" cylinder	1	7
" "	1	41
Brake cylinder, Cleaning	2	33
" " Force exerted in	3	59
" " Oiling	2	33
" " packing leather	2	32
" " pressure	3	36
" fails to apply	3	10
" " " release	3	11
" gear	3	44
" High-speed	4	17
" Outside equalized driver	3	42
" piston sleeve split	2	32
" power	3	58
" " Calculation of	3	59
" shoe pressure	3	58
" tests	4	29
" valve position while running	3	26
" " positions, The various	1	50
" " reservoir	1	49
" " Testing	3	5
" Water	4	36
" will not stay on	3	10
Brakes, Adjusting	3	40
" Bleeding off	3	29
" Holding on	3	22
" Releasing	1	33
" stuck on	3	32
Branch pipes, Leaks in	3	13
Breaking-in-two of train	3	29
Burst hose	3	28
" " To locate	3	29

C.

	Sec.	Page.
Calculating the power of cam driver-brake	3	55
Calculating the power of Hodge brake gear	3	52
Calculating the power of outside equalized brake gear	3	57
Calculating the power of Stevens brake gear	3	55
Cam driver-brake	3	42
Car, Braking power required for	3	59
" Cutting out	3	15
" discharge valve (signal)	4	8
" equipments	1	40
" Picking up	3	28
" Setting out	3	27

	Sec.	Page.
Care of engineer's valves	2	46
" " triples	2	30
Chamber *D*	1	49
" " Purpose of	1	49
Charging auxiliary reservoir	1	31
" " " Time required for	2	20
Cleaning the brake cylinder	2	33
" " feed-valve attachment	2	47
" " pump (inside)	2	6
" " triples	2	33
Clearance in pump	2	13
Coal-chute stops	3	23
Comparison of plain and quick-action triples	1	39
Compound lever	3	50
" " Law of	3	51
Conductor's valve	1	7
" " Use of	3	34
Coupling hook	1	44
Couplings, Frozen	3	14
Cut-out cock	1	6
Cutting out a brake	3	14
" " " car	3	15
" " " governor	2	4
Cylinder head for high-speed tender brake	4	26

D.

D-5 brake valve	1	54
D-8 brake valve	1	47
" " " defects	2	37
Defective brakes, Locating	3	16
" diaphragm in F-6 valve	2	45
" gasket between triple and auxiliary	2	31
" graduating spring	2	26
" release spring	2	32
" rings in triple	2	30
" triple, Locating	2	28
" " "	3	31
Defects and remedies in air-brake system	2	1
" " " " signaling system	4	11
" of plain triple	2	29
" " quick-action triple	2	23
Diaphragm of F-6 valve defective	2	45
Direct-application-and-exhaust port	1	49
Direct-application-and-supply port	1	49
Discharge pipe stopped up	2	11
" valves	1	19
Double-heading	3	34
Down grades, Descending long	4	35
Down grades, Handling trains on	3	30
Drain cups	1	7
Drip pipe of governor stopped up	2	3
Driver brake, Cam	3	42
" " fails to apply	3	7
" " " " release	3	7
" " " " stay on	3	7
" " Outside equalized	3	42
" " Testing	3	6
Duplex air gauge	1	10
" feed-valve attachment	4	20
" pump-governor	4	20
" " "	4	25
Duties of the triple valve	1	31

E.

E-6 brake valve	1	54
Effects of slack	3	2
" " train-pipe length	3	3
" " unequal piston travel	3	3
" " uneven distribution of loaded cars	3	3
Efficiency of pump	2	4
Eight-inch pump blowing	2	15
" " " stopping	2	17
Emergency application	1	33
" exhaust port	1	59
" part of triple	1	38
" position of D-8 valve	1	54
" " " F-6 valve	1	59
" " Service stops from	2	49
" stops	3	25
" " Accidental	3	26
" valve	1	36
" " leaking	2	24
Engineer's brake valve	1	5
" " " Care of	2	46
" " " The D-8	1	47
" " " The F-6, D-5, or E-6	1	54
" warning port	1	57
Equalization tests	3	35
Equalized driver brake, Outside	3	42
Equalizing piston	1	50
" port	1	49
" reservoir	1	49
" " Importance of	2	48
" " leaking	2	48
Excess pressure, Failure to maintain	2	38
" " High	2	40
" " spring, Testing	2	37
" " valve faults	2	39
Excessive pressure in pump, Effect of	2	8

	Sec.	Page.
Exhaust of plain triple blowing	2	29
Expander ring of brake piston	2	33
F.		
F-6 brake valve	1	54
" " " Leaks and defects in	2	43
" " " Operation of	1	55
Feed groove, Size of	2	20
" valve attachment	1	55
" " " Cleaning	2	47
" " " Duplex	4	20
" " " Testing	2	43
" " case gasket leaking	2	45
" " pipe bracket	4	27
" " piston sticking	2	45
First reduction	3	18
Force exerted in brake cylinder	3	59
Freight equipment, Leaks and defects in	2	31
" trains, All-air	3	24
" " Part-air	3	22
Frozen couplings	3	14
" triple	2	28
Fulcrum	3	44
" Pressure on	3	48
G.		
Gasket between triple and auxiliary defective	2	31
Governor, Cutting out	1	4
" defects (improved)	2	1
" " (old style)	2	3
" Duplex	4	20
" piston stuck	2	3
Graduating pin broken	2	27
" port	1	30
" spring defective	2	26
" valve	1	29
" " Importance of	2	22
" " leaking	2	26
Groove in rotary seat	2	41
Gumming up of pump	2	6
H.		
Hand-brakes, Use of	3	23
Handling trains	3	17
" " on down grades	3	30
Heating of pump	2	8
High excess pressure	2	40
" speed brake	4	17
" " " Operating	4	28
" " " triple valve	4	25
" " of pump, Effect of	2	9
Historical account of air brake	1	1
Hodge system of brake gear	3	52
Holding the brakes on	3	22
Hose and couplings, Leaks in	3	13
" bursting	3	28
" couplings	1	43
" Locating a burst	3	29
I.		
Improved governor, Remedying defects in	2	1
L.		
Lap position of D-8 valve	1	53
" " " F-6 valve	1	59
Law of compound lever	3	51
Leakage from air cylinder	2	10
" groove	1	42
" " stopped up	2	32
Leaks in auxiliary, Effect of	2	22
" " branch pipes	3	13
" " freight equipment	2	31
" " hose and couplings	3	13
" " plain triple	2	29
" " quick-action triple	2	23
" " train pipe	3	12
" " " " Effect of	2	22
Leaky air valves in pump	2	10
" emergency valve	2	24
" equalizing reservoir	2	48
" feed-valve case gasket	2	45
" gasket in brake valve	2	44
" graduating valve	2	26
" pin valve in governor	2	1
" pipe in auxiliary	2	31
" piston rings in pump	2	9
" pump gasket	2	15
" release valve	2	31
" reversing valve	2	14
" rotary valve	2	43
" " " Testing for	2	38
" slide valve in pump	2	15
" " " " triple	2	23
" steam valve of governor	2	2
" supply valve	2	44
" train-pipe exhaust valve	2	46
Leather of brake piston	2	32
Length of train pipe	3	3
Levers and leverage	3	44
" Bent	3	49
" Compound	3	50
" Simple	3	44
" Straight	3	44
" The three classes of	3	47
Life of pump	2	4
Lift of air valves	2	7
"Little drum"	1	49
Locating defective brakes	3	16

	Sec.	Page.
Locating defective triple	2	28
" " "	3	31
Location of main reservoir	1	9

M.

Main reservoir	1	8
" " Effect of too small	2	12
" " Location of	1	9
" " Size of	1	8
" valve (8-inch pump)	1	17
" " bushing (9½-inch pump)	1	22
" " rings blowing (8-inch pump)	2	16
" " " " (9½-inch pump)	2	15
" " " defective	2	19
Make-up of train	3	1
Measuring the piston travel	3	39

N.

Nine and a half inch pump blowing	2	14
" " " " " " stopping	2	16
Number of applications	3	21
" " reductions	3	19

O.

Oiling the brake cylinder	2	33
" " pump	2	5
" " triples	2	33
Old-style governor, Defects in	2	3
Operating the brake	3	1
" " high-speed brake	4	28
" " Sweeney compressor	4	41
" " water brake	4	39
Operation of 8-inch pump	1	18
" " 9½-inch pump	1	24
" " D-8 valve	1	51
" " F-6 valve	1	55
" " pump governor	1	14
" " reducing valve (brake)	4	21
" " reducing valve (signal)	4	5
Outside equalized driver brake	3	42
Overcharging train pipe	3	20
Overheating of pump	2	8

P.

Packing the pump	2	4
Part-air freight train	3	4
" " trains	3	22
Picking up cars	3	28
Pipe in auxiliary leaking	2	31
Piston travel	3	35
" " Adjustment of	3	35
" " Long	3	35
" " Measuring	3	39
" " Proper amount of	3	39
" " Short	3	35
Piston travel, Unequal	3	3
Plain triple valve	1	27
" " " Action of	1	29
" " " Description of	1	28
" " " leaks and defects	2	29
Position of brake valve while running	3	26
Pounding in pump	2	12
Preliminary-exhaust port	1	49
" " " plug	2	46
Pressure in brake cylinder	3	36
" on brake shoe	3	58
Pump, Cleaning out	2	6
" Clearance in	2	13
" Efficiency of	2	4
" governor	1	4
" " Improved	1	13
" " Old-style	2	3
" " Testing	2	43
" " "	3	5
" Gumming up of	2	6
" Heating of	2	8
" Life of	2	4
" Oiling	2	5
" Packing	2	4
" Pounding in	2	12
" run dry	2	19
" Running	2	6
" Starting	2	6
" Temperature of	2	8

Q.

Quick action during service reduction	3	31
" " part of triple	1	36
" " triple	1	34
" " " leaks and defects	2	23

R.

Receiving valves (of pump)	1	19
Recharging a short train	2	42
Reducing valve (high-speed brake)	4	21
" " (signal)	4	4
Reduction, First	3	18
Reductions, Number of	3	19
Release position of D-8 valve	1	51
" " " F-6 valve	1	57
" spring defective	2	32
" valves leaking	2	31
Releasing the brakes	1	33
Relief port of governor stopped up	2	2
"Removed corner" of triple slide valve	1	36
Retaining valve	1	45
" " Duty of	2	34
" " Gain effected by	2	35

	Sec.	Page.
Retaining valve leaks and defects	2	36
" " Operation of	1	46
" " Testing	2	34
" " Use of, on grades	2	34
Reversing piston	1	17
" " rings blowing	2	16
" " " defective	2	19
" " striking	2	13
" plate defective	2	19
" rod defective	2	19
" " worn	2	14
" the engine	3	26
" valve (8-inch pump)	1	17
" " " " leaks	2	16
" " (9½-inch pump)	1	24
" " " " leaks	2	14
Rotary seat	1	48
" valve	1	48
" " hard to turn	2	40
" " leaking	2	43
Rubber-seated valve	1	36
Running position of D-8 valve	1	52
" " " " "	3	26
" " " F-6 valve	1	58
" " " " "	3	26
" test	3	15
" the pump	2	6
" travel	3	38

S.

Safety valve for high-speed brake	4	24
Sand, Use of	3	32
Service part of quick-action triple	1	36
" port of triple	1	30
" position of D-8 valve	1	53
" " " F-6 valve	1	59
" stops	3	17
" " from emergency position	2	49
Setting out a car	3	27
Signal discharge valve fails to exhaust	4	12
" pipe fails to charge	4	12
" valve	4	9
" whistle	4	4
" " fails to blow	4	12
Signaling	4	11
Simple lever	3	44
Slack adjuster	3	39
" Effects of	3	2
Slide valve of pump leaking	2	15
" " " triple leaking	2	23
Sliding of wheels	3	33
Special apparatus for working heavy trains on grades	4	32
Speed of pump	2	7
Starting the pump	2	6
Station stop	3	20
Steam cylinder of 8-inch pump	1	16
" " " 9½-inch pump	1	22
" " Oiling	2	5
" piston rings blowing (8-inch)	2	16
" " " " (9½-inch)	2	15
Stevens system of brake gear	3	54
Sticky triple	2	27
Stop-pin (in centerpiece)	2	13
" " " " Defective	2	18
Stops, Emergency	3	25
" on grades	3	20
" Service	3	17
" Station	3	20
Stopped-up strainers	2	25
Stopping at water tanks and coal chutes	3	23
" by means of tail hose	3	22
" of 8-inch pump	2	17
" " 9½-inch pump	2	16
Straight lever	3	44
"Straight-air" brake	1	1
Strainers stopped up	2	25
Supply valve leaking	2	44
Sweeney air compressor	4	41

T.

Tail hose, Using, to make a stop	3	22
Temperature of pump	2	8
" test of wheels	3	15
Tender brake, Testing	3	6
Terminal test of signal apparatus	4	15
" " " train	3	8
Test, Running	3	15
" Temperature	3	15
Testing device for signaling system	4	16
" for leaky gasket in brake valve	2	44
" " " rotary	2	38
" " triple-valve leaks	3	14
" " worn piston-rings (pump)	2	9
" the air pump	3	5
" " air-signal apparatus	4	15
" " brake valve	3	5
" " driver brake	3	6
" " excess-pressure spring	2	37
" " feed-valve attachment	2	43
" " pump governor	2	43
" " " "	3	5
" " tender brake	3	6
" " train at terminals	3	8
" " triple piston	3	12
" " " valve	3	7
Tests, Brake	4	29

	Sec.	Page.
Time required to charge auxiliaries	2	20
Train, Make-up of	3	1
" pipe	1	6
" " check-valve	1	37
" " couplings	1	43
" " exhaust valve leaking	2	46
" " governor	1	56
" " leaks	3	12
" " " Effect of	2	22
" " Length of	3	3
" " Overcharging	3	20
Trains, Handling of	3	17
Travel, Running	3	38
Triple valve	1	7
" " Care of	2	30
" " Cleaning	2	33
" " Duties of	1	31
" " exhaust blowing	2	23
" " frozen up	2	28
" " " "	2	30
" " High-speed brake	4	25
" " leaks and defects	2	23
" " " Testing for	3	14
Triple valve, Locating a defective	3	31
" " piston, Testing	3	12
" " " rings defective	2	30
" " Plain	2	29
" " Quick-action	1	34
" " Testing	3	7

U.

Unequal piston travel	3	3
Uneven distribution of loaded cars	3	3
Use of hand-brakes	3	23

V.

Valve, Signal	4	9
Valves of air pump, Lift of	2	7

W.

Warning port (in engineer's valve)	1	57
Water brake	4	36
" tank stops	3	23
Wheels sliding	3	33
Whistle, Signal	4	4
Worn reversing rod	2	14

F 634

LIBRARY OF CONGRESS
0 028 145 871 1